SPARE PARTS BOOK

MDXS CORE

23/12/2025

nuova SIMONELLI®
The coffee machines you can trust.

nuova SIMONELLI®
The coffee machines you can trust.

T.01 **GRINDERS PARTS**
PARTI MACINADOSATORE

T.02 **MOTOR+DISPLAY PARTS**
PARTI MOTORE+DISPLAY

» LEGEND :

THE CODES WRITTEN IN BOLD REFER TO THE COMPONENTS EMPLOYED CURRENTLY.

THE CODES USED BEFORE ARE WRITTEN IN CORSIVE WITH INDICATED, ON THE SIDE, THE END OF VALIDITY DATE.

EXAMPLE:
03001531 - 01/09/2007
03001531

MDXS CORE

PARTI MACINADOSATORE

GRINDERS PARTS

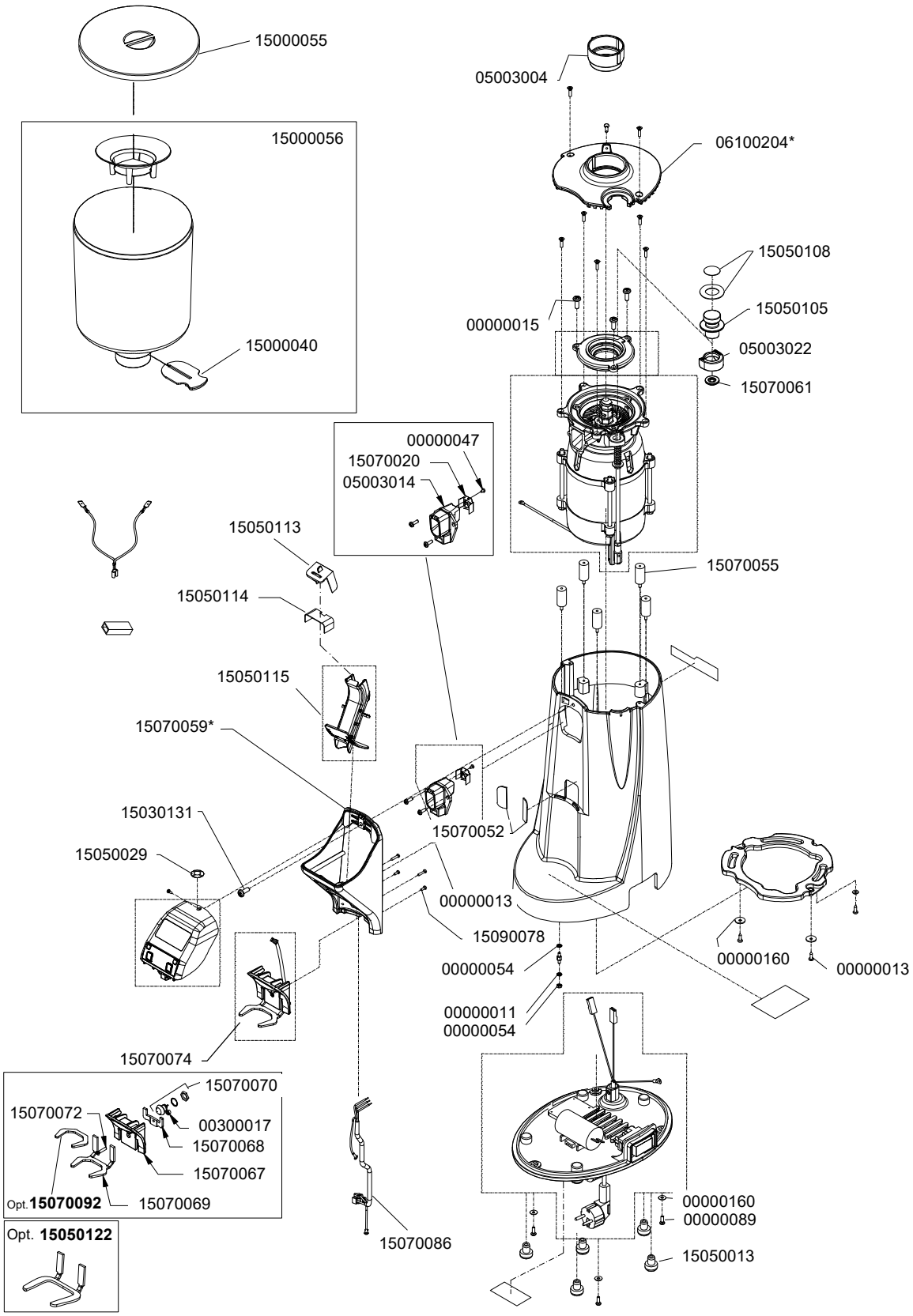

T.01

MDXS CORE

PARTI MACINADOSATORE

GRINDERS PARTS

COD.	DESCRIPTION	DESCRIZIONE	VAL.
00000011	S/S KNURLED WASHER M4 UNI8842/A	RONDELLA INOX M4 ZIGRINATA UNI8842/A	
00000013	S/S SLT COUNTERSUNK SCREW 3.5x9.5	VITE AUTOF INOX 3,5x9,5TSP/TCR	
00000015	GALV CROSS HEAD CAP SCREW M6x16	VITE AQ M6x16 TC T.CR. ZINC	
00000047	CROSS HEAD/CAP SELF-TAPPING SCREW 2,9x6,5	VITE AUTOF 2,9x6,5 TC/T.CR.	
00000054	GALV HIGH NUT M4	DADO AQ M4 ALTO ZINCATO	
00000089	S/S CROSSHEAD CAP SCREW M4x12 DIN7985	VITE INOX M4x12 TC TCR DIN7985	
00000160	S/S WASHER D4X12 UNI 6593	RONDELLA INOX M4 D4x12x1 UNI 6593	
00300017	S/S SELF-LOCKING NUT M4 LOW DIN 982	DADO AUTOBLOC INOX M4 BASSO DIN985	
05003004	HOPPER ADAPTER MDJ	GUARNIZ. ADATTAMENTO CAMPANA MDJ	
05003014	COFFEE OUTPUT ADAPTER MDJ OD	BOCCHETTONE USCITA CAFFE' MDJ ON DEMAND	
05003022	GRINDER KNOB SPACER MDJ	DISTANZIALE POMELLO MACINATURA MDJ	
06100204.BV	MDJ GRINDER BODY WHITE PAINTED LID	COPERCHIO CORPO MACININO MDJ BIANCO VERNICIATO	
06100204.NV	GRINDER BODY COVER MDJ PAINTED BLACK	COPERCHIO CORPO MACININO MDJ NERO VERNICIATO	
06100204.RV	GRINDER BODY COVER MDJ PAINTED RED	COPERCHIO CORPO MACININO MDJ ROSSO VERNICIATO	
15000040	HOPPER LOCK MDX/L 5101.0020	CHIUSURA CAMPANA MDX/L 5101.0020	
15000055	CYLINDRICAL HOPPER COVER 51070013	COPERCHIO CAMP.CILIND. 5107.0013	
15030131	S/S SCREW M6x16 TSP T.CR. 6060.0012	VITE INOX M6x16 TSP TCR 6060.0012	
15050013	FOOT MDU/MDX 2501.0004	PIEDINO MDU/MDX 2501.0004	
15050029	LABEL LOGO MNS SMALL E66	ETICHETTA LOGO MNS PICCOLA E66	
15050105	GRIND REGISTER KNOB MDXS 0620.0004-ANB	POMELLO REGISTRO MACIN. MDXS 0620.0004-ANB	
15050108	GRINDER REGISTER KNOB LABEL KIT MDXS-MDJ E80+E4	KIT ETICHETTE POMELLO REGISTRO MACIN. MDXS-MDJE	
15050113	REMOVABLE UPPER CAP SLIDE MDXS CORE 2572.0086	TAPPO REMOVIBILE SUP. SCIVOLO MDXS CORE2572.0086	
15050114	COFFEE SLIDE GASKET MDXS CORE 6045.0017	GUARNIZIONE BOCCHETTONE MDXS CORE 6045.0017	
15050115	PLASTIC COFFEE CHUTE GROUP MDXS CORE4124404.3(	GRUPPO SCIVOLO CAFFE' PLASTICA MDXS CORE4124404	
15050122	PORTAFILTER FORK MDXS-MDJ "MZ" RIC-FOR.0610-001	FORCELLA MDXS-MDXJ "MZ" RIC-FOR.0610-001	
15070020	CLUMP CRUSHER 230V	FRANGIA CLUMP CRUSHER MDJ OD 230V - MDXS OD(ex 1	
15070052	DAMPING GASKET 5MM 2560.0006	GUARNIZIONE SMORZATRICE 5MM 2560.0006	
15070055	ANTIVIBRATION D15xH30xL13 M4 M/F SH.57 6040.0055	ANTIVIBRANTE D15xH30xL13 M4 M/F SH.57 6040.0055	
15070059.0	RED GROUP FLOWMETER BODY MDJ OD 06100244-255	CORPO GR. DOSAT. MDJ ON DEMAND COLORE ROSSO06	
15070059.2	BLACK GROUP FLOWMETER BODY MDJ OD 06100244-00	CORPO GR. DOSAT. MDJ ON DEMAND COLORE NERO061(	
15070059.8	WHITE GROUP FLOWMETER BODY MDJ OD 06100244-10	CORPO GR. DOSAT. MDJ ON DEMAND COLORE BIANCO06	
15070061	ROD BUSHING POSITIONING - MDJ TEFLON 2501.0026	BOCCOLA CENTRAGGIO ASTA x MDJ TEFLON 2501.0026	
15070067	NEW INLAY PORTAFILTER ON DEMAND 4400.0032	NUOVO TASSELLO PORTAFILTRO ON DEMAND 4400.0032	
15070068	FORK BLOCKING STAFF ZT/OL 4400.0082	STAFFA BLOCCAGGIO FORCELLA x ZT/OL 4400.0082	
15070069	ADJUSTABLE FILTER-HOLDER FORK ZT/OL 4400.0089	FORCELLA PORTAFILTR.REGOLABILE ZT/OL 4400.0089	
15070070	KIT MICRO (1000.0007 + CABLE73 +6062.0018-007) 4402.8(	KIT MICRO (1000.0007 + CAV73 +6062.0018-007)4402.8000	
15070072	S/S SCREW M4x20 ROUND HEAD 6060.0146	VITE INOX M4x20 TESTA X SVAS. BOMBATA 6060.0146	
15070074	NEW KIT GROUP BLOCK FORK MDJ OD 4124401.5200	KIT NUOVO GRUP.BLOCCO FORCELLA MDJ OD 4124401.5	
15070086	MDXS WIRING CAV60	CAVO COLLEG. MODELLI ON DEMAND CAV60	
15070092	FORK PORON MDXS(DISPLAY) - MDJ(DISPLAY) 6045.0027	PORON FORCELLA MDXS OD - MDJ OD 6045.0027	
15090078	PLASTIC SCREW 3x7	VITE 3x7 xPlastica (WN1412KB30X7Z) 6060.0135	
15000056	CYLINDRICAL HOPPER 5110.0000 (5107.0011 + 5101.0020	CAMPANA CILINDRICA 5110.0000 (5107.0011 +5101.0020 +	

MDXS CORE

PARTI MOTORE+DISPLAY

MOTOR+DISPLAY PARTS

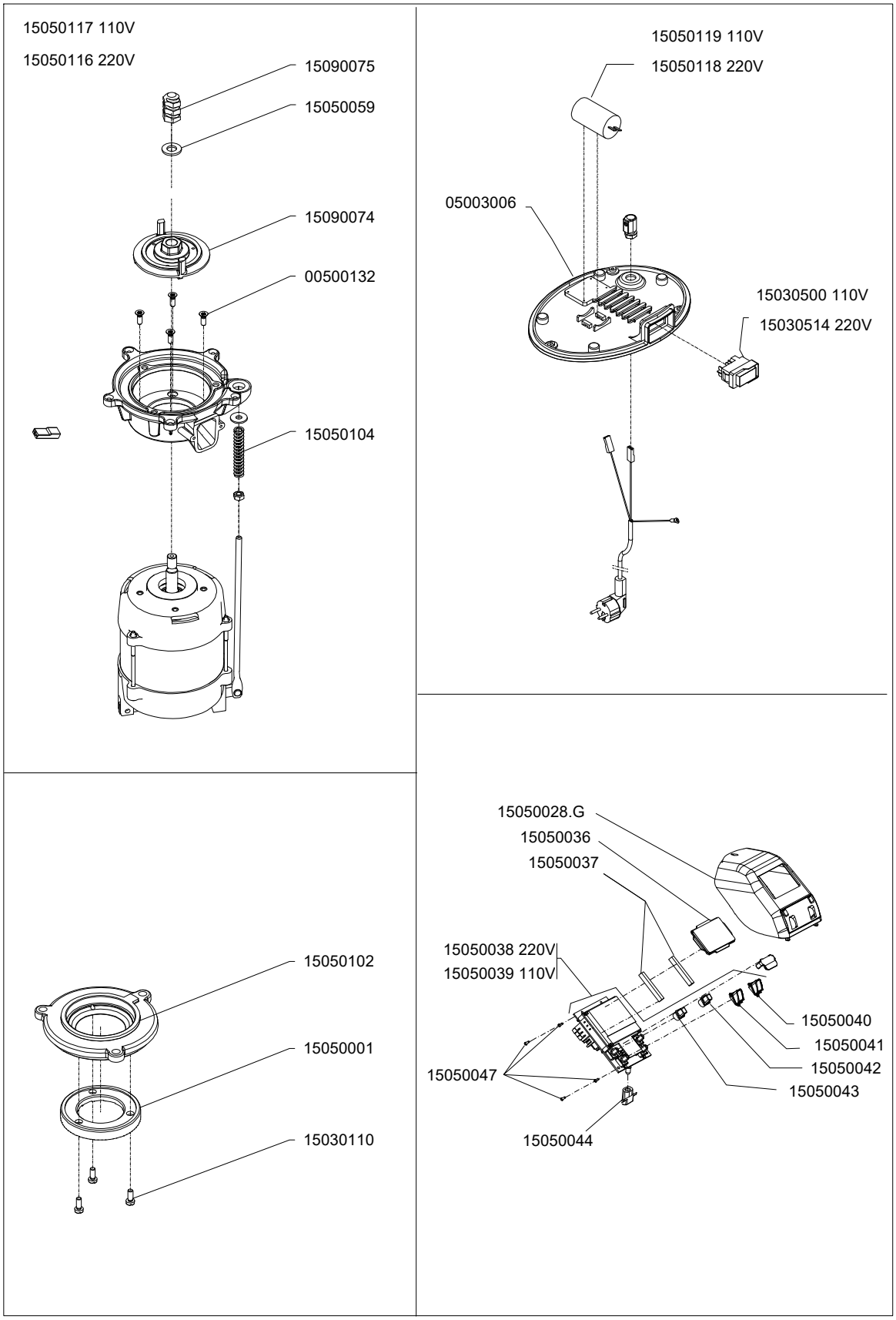

T.02

MDXS CORE

PARTI MOTORE+DISPLAY

MOTOR+DISPLAY PARTS

COD.	DESCRIPTION	DESCRIZIONE	VAL.
15050028.G		CONSOLE PL COMANDI ON DEMAND GREZZO MDXS CORI	
05003006	BASE CLOSURE MDJ	FONDO CHIUSURA MDJ	
15030110	S/S SCREW M4x8 CUT HEAD 6060.0032	VITE INOX M4x8 TESTA TAGLIO 6060.0032	
15030500	SWITCH 110V MYTHOS MY VA 1011.0054	INTERRUTTORE 110V MYTHOS MY VA1011.0054	
15030514	SWITCH 220VAC 1011.0055	INTERRUTTORE 220Vac - 1011.00551011.0055	
15050001	BURR PAIR D.64 MDX/MASTER	COPPIA MACINE D.64 MDX/MASTERMAC064NS-00-01	
15050036	DISPLAY GLASS ON DEMAND 4400.0009	VETRINO DISPLAY ON DEMAND 4400.0009	
15050037	DISPLAY GASKET ON DEMAND 4400.0014	GUARNIZIONE DISPLAY ON DEMAND 4400.0014	
15050038	KIT BOARD DSP+4KEY OD 230V "NS" RIC-RCR.4400-NS2	KIT SCHEDA DISPLAY+4 PULSANTI ON DEMAND 230V "NS"	
15050039	KIT BOARD DSP+4KEY OD 115V "NS" RIC-RCR.4400-NS1	KIT SCHEDA DISPLAY+4 PULSANTI ON DEMAND 115V "NS"	
15050040	SILK SCREEN PRINTING DOSE 2 BUTTON ON DEMAND	TASTO DOSE 2 SERIGR. ON DEMAND 4400.0010D2ST	
15050041	SILK SCREEN PRINTING DOSE 1 BUTTON ON DEMAND	TASTO DOSE 1 SERIGR. ON DEMAND 4400.0010D1ST	
15050042	KEY + DOSE INCREASE ON DEMAND 4400.0011+ST	TASTO + AUMENTO DOSE ON DEMAND 4400.0011+ST	
15050043	KEY - DOSE DECREASE ON DEMAND 4400.0011-ST	TASTO - DECREMENTO DOSE ON DEMAND 4400.0011-ST	
15050044	LIGHTGUIDE FOR FILTER HOLDER ON DEMAND 4400.001	GUIDALUCE PER FILTRO ON DEMAND 4400.0013	
15050047	SELF-THREADING SCREW TES.CIL. 6060.0009	VITE AUTOF 2,2x9,5 TES.CIL. 6060.0009	
15050059	S/S WASHER M10 10,5x21 UNI6592 6061.0001	RONDELLA INOX M10 10,5x21 UNI6592 6061.0001	
15050102	SUPERIOR BURR HOLDER MDXS 0613.0005	PORTAMACINA SUP. MDXS 0613.0005	
15050104	GRINDING REGULATOR SPRING ROD 6002.7360	MOLLA TIRANTE REG. MACINATURA 6002.7360	
15050116	COMPLETE ENGINE 220V MDXS CORE	MOTORE COMPLETO 220V MDXS CORE	
15050117	COMPLETE ENGINE 110V MDXS CORE	MOTORE COMPLETO 110V MDXS CORE	
15050118	CAPACITOR RIC. 12MF 600Vac S2 UL 220V MDXS CORE1(	CONDENSATORE RIC. 12MF 600Vac S2 UL 220V MDXS COI	
15050119	CAPACITOR RIC. 40MF 250 Vac110V MDXS CORE1013.C0	CONDENSATORE RIC. 40MF 250 Vac110V MDXS CORE101	
15090074	INFERIOR BURR HOLDER 65AG/02	PORTAMACINE INFERIORE 65AG/02 2501.0002-RIC	
15090075	NUT-STOP BURR HOLDER 2501.0003-R04	DADO FERMA PORTAMACINE 2501.0003-R04	

V.2 23/12/2025

www.nuovasimonelli.it

Simonelli Group
Via E. Betti, 1
62020 Belforte del Chienti
Macerata - Italy
T +39 07339501
info@simonelligroup.it
www.nuovasimonelli.it

Nuova Distribution Usa
6940 Salashan Pkwy, Bldg, A
Ferndale, WA 98248
T +1 3603662226
info@simonelliusa.com
www.simonelliusa.com

Nuova Simonelli Asia Pacific
61 Kaki Bukit Ave 1
#02-24 Shun Li Industrial Park
Singapore 417943
T +65 68410985
www.nuovasimonelliasiapacific.com

Nuova Distribution France
Hexapole - Actipole - Bat 5
Rue Maurice Herzog
73420 Viviers Du Lac
T +33 (0) 967894852
info@nuovadistribution.fr

nuova SIMONELLI®
The coffee machines you can trust.