SPARE PARTS BOOK

MDXS

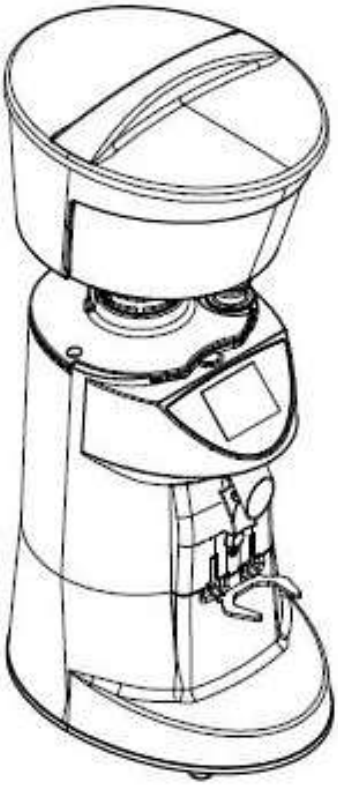

23/12/2025

nuova SIMONELLI®
The coffee machines you can trust.

nuova SIMONELLI®
The coffee machines you can trust.

T.01 **GRINDERS PARTS**
PARTI MACINADOSATORE

T.02 **MOTOR+DISPLAY PARTS**
PARTI MOTORE+DISPLAY

» LEGEND :

THE CODES WRITTEN IN BOLD REFER TO THE COMPONENTS EMPLOYED CURRENTLY.

THE CODES USED BEFORE ARE WRITTEN IN CORSIVE WITH INDICATED, ON THE SIDE, THE END OF VALIDITY DATE.

EXAMPLE:
03001531 - 01/09/2007
03001531

PARTI MACINADOSATORE

GRINDERS PARTS

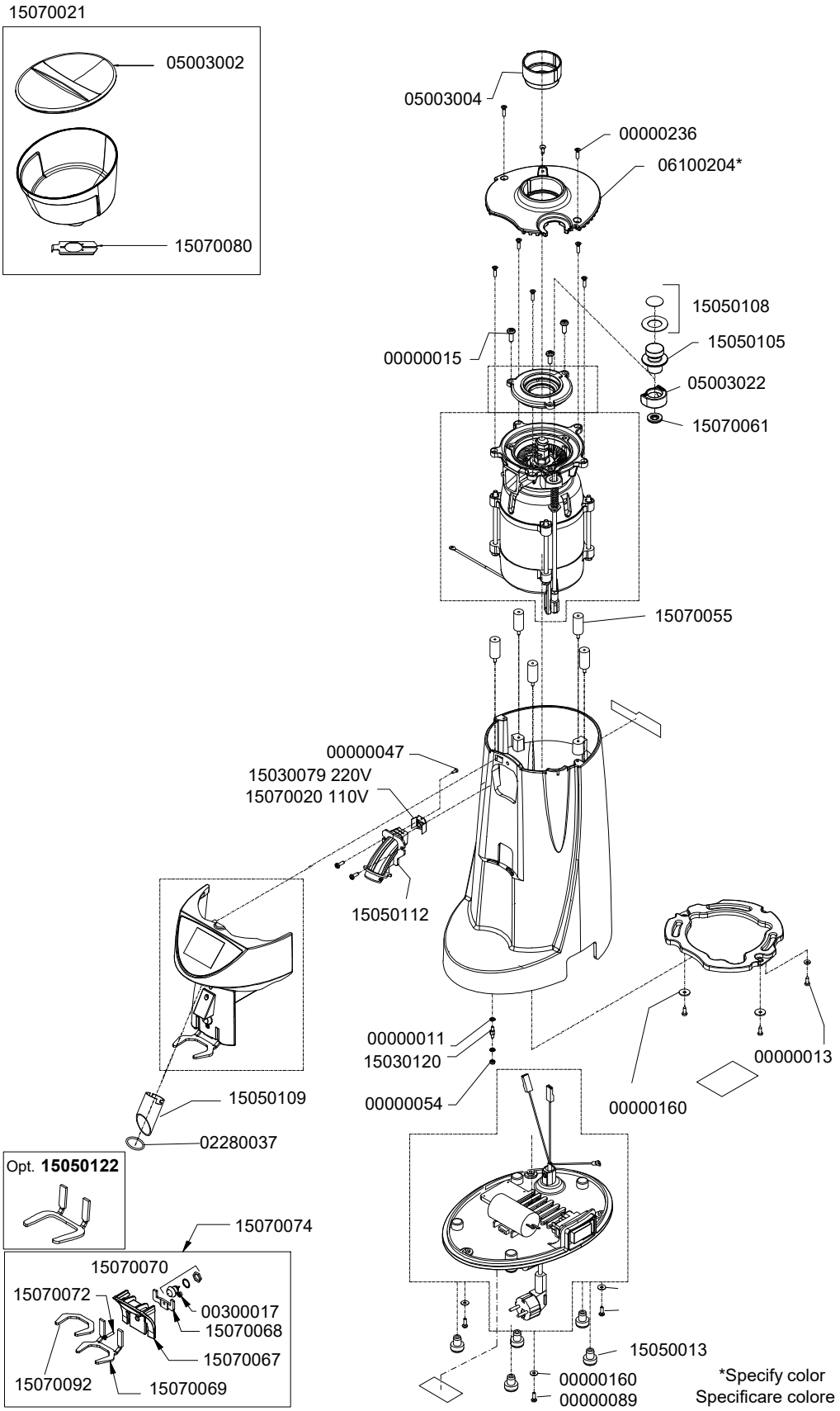

T.01

MDXS

PARTI MACINADOSATORE

GRINDERS PARTS

COD.	DESCRIPTION	DESCRIZIONE	VAL.
00000013	S/S SLT COUNTERSUNK SCREW 3.5x9.5	VITE AUTOF INOX 3,5x9,5TSP/TCR	
00000015	GALV CROSS HEAD CAP SCREW M6x16	VITE AQ M6x16 TC T.CR. ZINC	
00000047	CROSS HEAD/CAP SELF-TAPPING SCREW 2,9x6,5	VITE AUTOF 2,9x6,5 TC/T.CR.	
00000054	GALV HIGH NUT M4	DADO AQ M4 ALTO ZINCATO	
00000089	S/S CROSSHEAD CAP SCREW M4x12 DIN7985	VITE INOX M4x12 TC TCR DIN7985	
00000160	S/S WASHER D4X12 UNI 6593	RONDELLA INOX M4 D4x12x1 UNI 6593	
00000236	S/S SCREW M4X16 TSP TCR	VITE INOX M4x16 TSP TCR	
00300017	S/S SELF-LOCKING NUT M4 LOW DIN 982	DADO AUTOBLOC INOX M4 BASSO DIN985	
02280037	GASKET O-RING JOINT LOCK 16x2 NBR70	GUARN. OR CHIUSURA SNODO 16x2 NBR70	
05003002	HOPPER COVER MDJ-MDK	COPERCHIO CAMPANA MDJ-MDK	
05003004	HOPPER ADAPTER MDJ	GUARNIZ. ADATTAMENTO CAMPANA MDJ	
05003022	GRINDER KNOB SPACER MDJ	DISTANZIALE POMELLO MACINATURA MDJ	
06100204.NV	GRINDER BODY COVER MDJ PAINTED BLACK	COPERCHIO CORPO MACININO MDJ NERO VERNICIATO	
06100204.BV	MDJ GRINDER BODY WHITE PAINTED LID	COPERCHIO CORPO MACININO MDJ BIANCO VERNICIATO	
06100204.RV	GRINDER BODY COVER MDJ PAINTED RED	COPERCHIO CORPO MACININO MDJ ROSSO VERNICIATO	
15030079	CLUMP CRUSHER FLANGE MYTHOS sp.0,19-MDJ OD 230'	FRANGIA CLUMP CRUSHER MYTHOS sp.0,194100.0083	
15030120	SPACER THERMOSTAT ENGINE MYTHOS ONE 2501.0020	DISTANZIALE TERMOSTATO MOTORE MYTHOS ONE 2501.	
15050013	FOOT MDU/MDX 2501.0004	PIEDINO MDU/MDX 2501.0004	
15050105	GRIND REGISTER KNOB MDXS 0620.0004-ANB	POMELLO REGISTRO MACIN. MDXS 0620.0004-ANB	
15050108	GRINDER REGISTER KNOB LABEL KIT MDXS-MDJ E80+E4	KIT ETICHETTE POMELLO REGISTRO MACIN. MDXS-MDJE	
15050109	GRINDER DISPENSING TUBE MDXS-MDJ 4170.0007A0R00	TUBO EROGAZIONE MACIN. MDXS-MDJ 4170.0007A0R01-X	
15050112	DISPENSING CHANNEL GRIND. MDXS-MDJ 0710.0007A0R	CANALE EROGAZIONE MACIN. MDXS-MDJ0710.0007A0R00	
15050122	PORTAFILTER FORK MDXS-MDJ "MZ" RIC-FOR.0610-001	FORCELLA MDXS-MDXJ "MZ" RIC-FOR.0610-001	
15070020	CLUMP CRUSHER 230V	FRANGIA CLUMP CRUSHER MDJ OD 230V - MDXS OD(ex 1	
15070021	COMPLETE HOPPER MDJ 05013000	CAMPANA COMP. MDJ 05013000	
15070055	ANTIVIBRATION D15xH30xL13 M4 M/F SH.57 6040.0055	ANTIVIBRANTE D15xH30xL13 M4 M/F SH.57 6040.0055	
15070061	ROD BUSHING POSITIONING - MDJ TEFLON 2501.0026	BOCCOLA CENTRAGGIO ASTA x MDJ TEFLON 2501.0026	
15070067	NEW INLAY PORTAFILTER ON DEMAND 4400.0032	NUOVO TASSELLO PORTAFILTRO ON DEMAND 4400.0032	
15070068	FORK BLOCKING STAFF ZT/OL 4400.0082	STAFFA BLOCCAGGIO FORCELLA x ZT/OL 4400.0082	
15070069	ADJUSTABLE FILTER-HOLDER FORK ZT/OL 4400.0089	FORCELLA PORTAFILTR.REGOLABILE ZT/OL 4400.0089	
15070070	KIT MICRO (1000.0007 + CABLE73 +6062.0018-007) 4402.8	KIT MICRO (1000.0007 + CAV73 +6062.0018-007)4402.8000	
15070072	S/S SCREW M4x20 ROUND HEAD 6060.0146	VITE INOX M4x20 TESTA X SVAS. BOMBATA 6060.0146	
15070074	NEW KIT GROUP BLOCK FORK MDJ OD 4124401.5200	KIT NUOVO GRUP.BLOCCO FORCELLA MDJ OD 4124401.5	
15070080	Hopper Closing Slide MDJ-MDXS 5210.0003	LINGUETTA CAMPANA MDJ-MDXS 5210.0003	
15070092	FORK PORON MDXS(DISPLAY) - MDJ(DISPLAY) 6045.0027	PORON FORCELLA MDXS OD - MDJ OD 6045.0027	
00000011	S/S KNURLED WASHER M4 UNI8842/A	RONDELLA INOX M4 ZIGRINATA UNI8842/A	

PARTI MOTORE+DISPLAY

MOTOR+DISPLAY PARTS

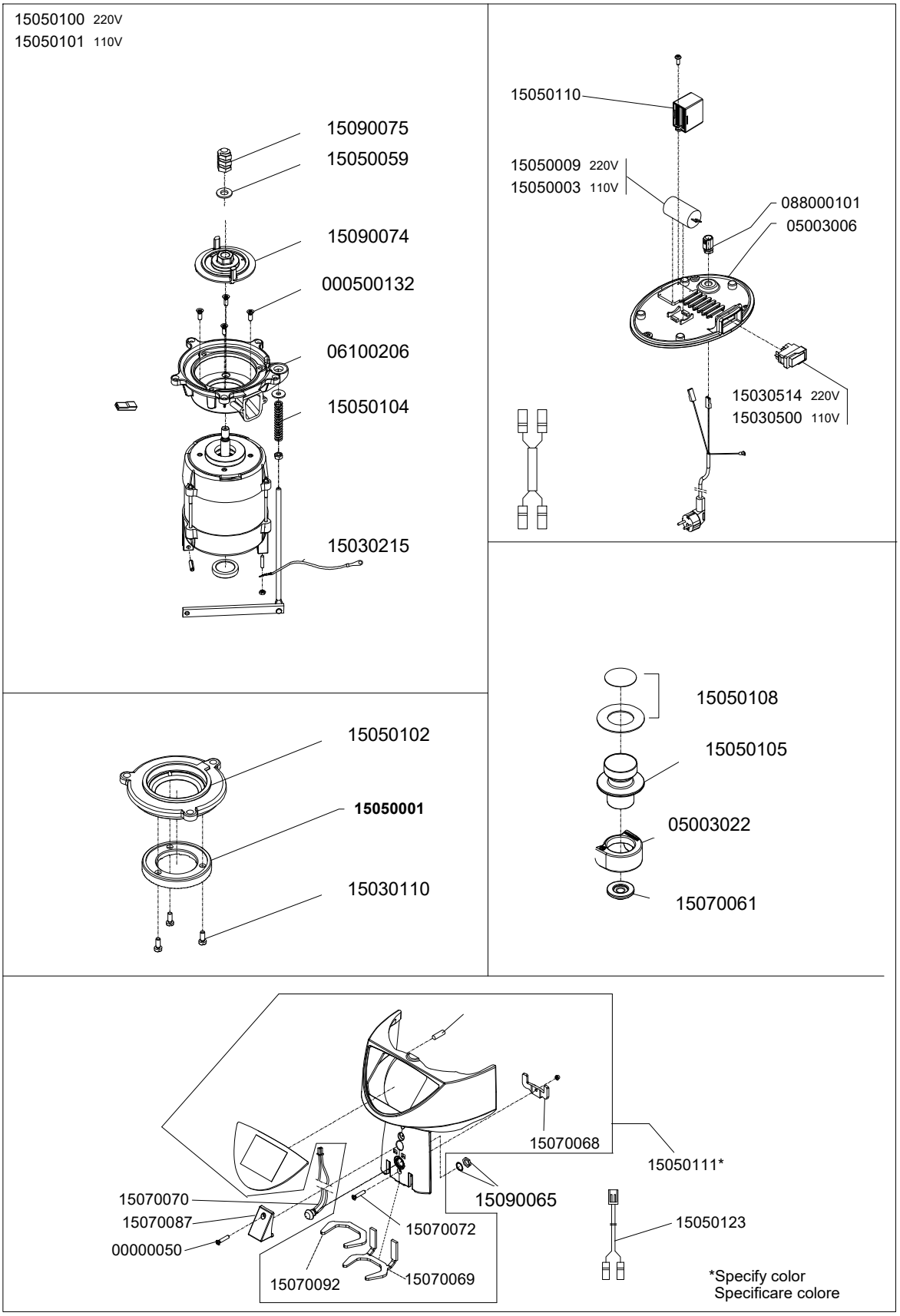

MDXS

PARTI MOTORE+DISPLAY

MOTOR+DISPLAY PARTS

COD.	DESCRIPTION	DESCRIZIONE	VAL.
00000050	CROSS HEAD/CAP SELF-TAPPING CHIPBOARD SCREW 3	VITE AUTOF 3,5x12 TC/T.CR. TRUCIOLARE	
000500132	S/S SCREW M5x14 SLT COUNTERSUNK	VITE INOX M5x14 TSP TCR	
05003006	BASE CLOSURE MDJ	FONDO CHIUSURA MDJ	
05003022	GRINDER KNOB SPACER MDJ	DISTANZIALE POMELLO MACINATURA MDJ	
06100206	ENGINE SUPPORT MDJ	SUPPORTO MOTORE MDJ	
088000101	CABLE CLAMP FOR THE PANEL MM. 13	BLOCCACAVO CON VITE DA PANNELLO MM.136040.0023	
15030110	S/S SCREW M4x8 CUT HEAD 6060.0032	VITE INOX M4x8 TESTA TAGLIO 6060.0032	
15030215	EYELET CABLE 4.2 30cm GROUND CAV21	CAVO OCCHIELLO 4.2 30cm TERRA CAV21	
15030500	SWITCH 110V MYTHOS MY VA 1011.0054	INTERRUTTORE 110V MYTHOS MY VA1011.0054	
15030514	SWITCH 220VAC 1011.0055	INTERRUTTORE 220Vac - 1011.00551011.0055	
15050001	BURR PAIR D.64 MDX/MASTER	COPPIA MACINE D.64 MDX/MASTERMAC064NS-00-01	
15050003	CAPACITOR 20microf 115V	CONDENS. 20microf 115V 1013.0020	
15050009	CAPACITOR 10microF x 04500031	CONDENS. 10microF x 04500031 1013.0010	
15050059	S/S WASHER M10 10,5x21 UNI6592 6061.0001	RONDELLA INOX M10 10,5x21 UNI6592 6061.0001	
15050100	MDXS COMPLETE ENGINE 220V ATM6X2XX-0001-KIT	MOTORE COMPLETO MDXS 220V ATM6X2XX-0001-KIT	
15050101	MDXS COMPLETE ENGINE 110V ATM6X1XX-0001-KIT	MOTORE COMPLETO MDXS 110V ATM6X1XX-0001-KIT	
15050102	SUPERIOR BURR HOLDER MDXS 0613.0005	PORTAMACINA SUP. MDXS 0613.0005	
15050104	GRINDING REGULATOR SPRING ROD 6002.7360	MOLLA TIRANTE REG. MACINATURA 6002.7360	
15050105	GRIND REGISTER KNOB MDXS 0620.0004-ANB	POMELLO REGISTRO MACIN. MDXS 0620.0004-ANB	
15050108	GRINDER REGISTER KNOB LABEL KIT MDXS-MDJ E80+E4	KIT ETICHETTE POMELLO REGISTRO MACIN. MDXS-MDJE	
15050110	POWER SUPPLY CARD 220-110V MDXS/MDJ 0710.0220A0	SCHEDA ALIMENTAZ. 220-110V MDXS/MDJ0710.0210A0R0	
15050111.BV	DISPLAY KIT MDXS PAINTED WHITE RIC-GFR.0610-002	KIT DISPLAY MDXS BIANCO VERNICIATORIC-GFR.0610-002	
15050111.FMGV	DISPLAY KIT MDXS METAL GREY RIC-GFR.0610-004	KIT DISPLAY MDXS FULL METAL GREY VERNICIATORIC-GF	
15050111.NOV	DISPLAY KIT MDXS PAINTED MTT BLK RIC-GFR.0610-001	KIT DISPLAY MDXS NERO OPACO VERNICIATORIC-GFR.06	
15050111.RV	DISPLAY KIT MDXS PAINTED RED RIC-GFR.0610-003	KIT DISPLAY MDXS ROSSO VERNICIATORIC-GFR.0610-003	
15050123	WIRING CPU/DSP MDXS MDJ	CABLAGGIO CPU/DSP MDXS MDJ CAV150D509036200	
15070061	ROD BUSHING POSITIONING - MDJ TEFLON 2501.0026	BOCCOLA CENTRAGGIO ASTA x MDJ TEFLON 2501.0026	
15070068	FORK BLOCKING STAFF ZT/OL 4400.0082	STAFFA BLOCCAGGIO FORCELLA x ZT/OL 4400.0082	
15070069	ADJUSTABLE FILTER-HOLDER FORK ZT/OL 4400.0089	FORCELLA PORTAFILTR.REGOLABILE ZT/OL 4400.0089	
15070070	KIT MICRO (1000.0007 + CABLE73 +6062.0018-007) 4402.8	KIT MICRO (1000.0007 + CAV73 +6062.0018-007)4402.8000	
15070072	S/S SCREW M4x20 ROUND HEAD 6060.0146	VITE INOX M4x20 TESTA X SVAS. BOMBATA 6060.0146	
15070087	FILTER HOLDER PLUG MDJ-MDXS 0710.0023A0R02-XXG	TASSELLO PORTAFILTRO MDJ-MDXS 0710.0023A0R02-XX	
15070092	FORK PORON MDXS(DISPLAY) - MDJ(DISPLAY) 6045.0027	PORON FORCELLA MDXS OD - MDJ OD 6045.0027	
15090065	NUT+WASHER KIT	KIT DADO+ROSETTA ANTISV PER 1000.00076062.0018-000	
15090074	INFERIOR BURR HOLDER 65AG/02	PORTAMACINE INFERIORE 65AG/02 2501.0002-RIC	
15090075	NUT-STOP BURR HOLDER 2501.0003-R04	DADO FERMA PORTAMACINE 2501.0003-R04	

V.2 23/12/2025

www.nuovasimonelli.it

Simonelli Group
Via E. Betti, 1
62020 Belforte del Chienti
Macerata - Italy
T +39 07339501
info@simonelligroup.it
www.nuovasimonelli.it

Nuova Distribution Usa
6940 Salashan Pkwy, Bldg, A
Ferndale, WA 98248
T +1 3603662226
info@simonelliusa.com
www.simonelliusa.com

Nuova Simonelli Asia Pacific
61 Kaki Bukit Ave 1
#02-24 Shun Li Industrial Park
Singapore 417943
T +65 68410985
www.nuovasimonelliasiapacific.com

Nuova Distribution France
Hexapole - Actipole - Bat 5
Rue Maurice Herzog
73420 Viviers Du Lac
T +33 (0) 967894852
info@nuovadistribution.fr

nuova SIMONELLI®
The coffee machines you can trust.