# SPARE PARTS BOOK

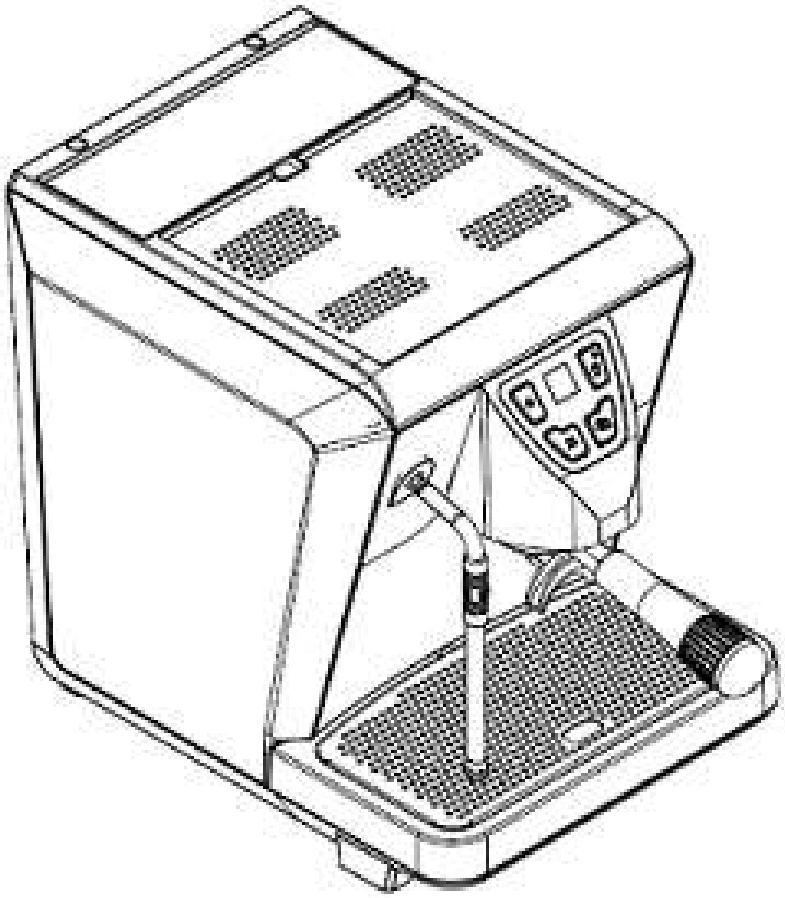

**OSCAR MOOD**

23/12/2025

nuova SIMONELLI®

The coffee machines you can trust.

nuova SIMONELLI®
The coffee machines you can trust.


T. 01 **CABINET PARTS**
COMPONENTI GRUPPO CARENA

T.02 **POURING GROUP PARTS**
COMP. GRUPPO EROGAZIONE

T.03 **FRAME PARTS**
COMPONENTI TELAIO

T.04 **HYDR. GROUP+STEAM WAND**
GRUPPO IDR.+LANCIA VAPORE

T.05 **PARTS SILENT PACK**
COMPONENTI SILENT PACK

T.06 **BOILER GROUP PARTS**
COMP. GRUPPO CALDAIA

T.07 **ELECTRIC AND ELECTRONIC PARTS**
COMP. ELETTRICI ED ELETTR.


» LEGEND :

THE CODES WRITTEN IN BOLD REFER TO THE COMPONENTS EMPLOYED CURRENTLY.

THE CODES USED BEFORE ARE WRITTEN IN CORSIVE WITH INDICATED, ON THE SIDE, THE END OF VALIDITY DATE.

EXAMPLE:
*03001531 - 01/09/2007*
**03001531**

# COMPONENTI GRUPPO CARENA

# CABINET PARTS

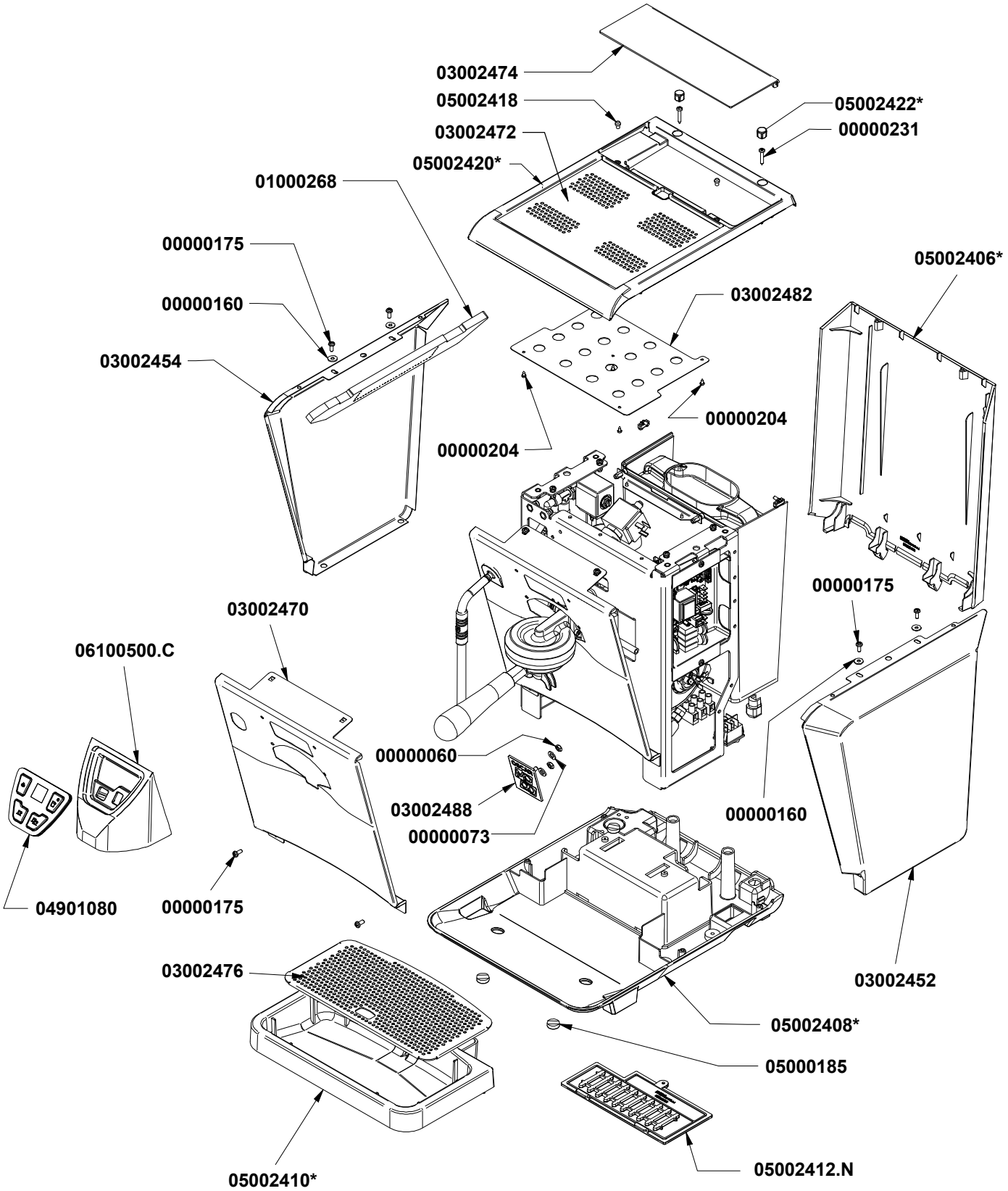


*Specify color
Specificare colore

T. 01

# COMPONENTI GRUPPO CARENA

# CABINET PARTS

| COD. | DESCRIPTION | DESCRIZIONE | VAL. |
|---|---|---|---|
| 00000060 | GALV MEDIUM NUT AQ M3 | DADO AQ M3 MEDIO ZINCATO | |
| 00000073 | S/S WASHER D.8x4x1 UNI6592 | RONDELLA INOX M4 D4x8x1 UNI6592 | |
| 00000160 | S/S WASHER D4X12 UNI 6593 | RONDELLA INOX M4 D4x12x1 UNI 6593 | |
| 00000175 | S/S CROSS HEAD CAP SCREW M4X10 | VITE INOX M4x10 TC TCR | |
| 00000204 | S/S SELF-TAPPING SCREW 2,9x6,5 TC-TCR DIN7981 | VITE AUTOF INOX 2,9x6,5 TC TCR DIN7981 | |
| 00000231 | S/S SELF-TAPPING SCREW 3,9x19 | VITE AUTOF INOX 3,9x19 TC TCR | |
| 01000268 | FRAME INSULATION KIT OSCAR II | KIT ISOLANTE CARENA OSCAR II | |
| 03002452 | RIGHT SIDE PANEL OSCAR II | CARENA FIANCO DX OSCAR II | |
| 03002454 | LEFT SIDE PANEL OSCAR II | CARENA FIANCO SX OSCAR II | |
| 03002470 | FRONT PANEL OSCAR MOOD | CARENA FRONTALE OSCAR MOOD | |
| 03002472 | CUP HOLDER PLATE OSCAR MOOD | PIATTO PORTATAZZE OSCAR MOOD | |
| 03002474 | TANK COVER OSCAR MOOD | COPERCHIO TANICA OSCAR MOOD | |
| 03002476 | WORKTOP SURFACE OSCAR MOOD | RETINA PIANO LAV. OSCAR MOOD | |
| 03002482 | PROTECTION CUPWARMER OSCAR MOOD | PROTEZ. P.SCALDATAZZE OSCAR MOOD | |
| 03002488 | FRONT LOGO OSCAR MOOD | LOGO FRONTALE OSCAR MOOD | |
| 04901080 | DISPENSING BOARD OSCAR MOOD | SCHEDA EROGAZIONE OSCAR MOOD | |
| 05000185 | FOOT OSCAR | PIEDINO OSCAR | |
| 05002406.RV | BACKSIDE FRAME MOOD PAINTED RED | CARENA RETRO OSCAR MOOD ROSSO VERNIC. | |
| 05002406.NOV | BACKSIDE FRAME MOOD PAINTED MATT BLACK | CARENA RETRO OSCAR MOOD NERO OPACO VERNIC. | |
| 05002406.TRV | BACKSIDE FRAME MOOD PAINTED DOVE GREY | CARENA RETRO OSCAR MOOD TORTORA VERNIC. | |
| 05002406.PSV | BACKSIDE FRAME MOOD PAINTED PISTACHIO | CARENA RETRO OSCAR MOOD PISTACCHIO VERNIC. | |
| 05002408.NOV | INFERIOR FRAME MOOD PAINTED MATT BLACK | CARENA INFERIORE OSCAR MOOD NERO OPACO VERNIC | |
| 05002408.PSV | INFERIOR FRAME MOOD PAINTED PISTACHIO | CARENA INFERIORE OSCAR MOOD PISTACCHIO VERNIC. | |
| 05002408.RV | INFERIOR FRAME MOOD PAINTED RED | CARENA INFERIORE OSCAR MOOD ROSSO VERNIC. | |
| 05002408.TRV | INFERIOR FRAME MOOD DOVE GREY | CARENA INFERIORE OSCAR MOOD TORTORA VERNIC. | |
| 05002410.NOV | DRIP TRAY MOOD PAINTED MATT BLACK | VASCHETTA RACC.ACQUA OSCAR MOOD NERO OPACO V | |
| 05002410.PSV | DRIP TRAY MOOD PAINTED PISTACHIO | VASCHETTA RACC.ACQUA OSCAR MOOD PISTACCHIO VE | |
| 05002410.RV | DRIP TRAY MOOD PAINTED RED | VASCHETTA RACC.ACQUA OSCAR MOOD ROSSO VERNIC | |
| 05002410.TRV | DRIP TRAY MOOD PAINTED DOVE GREY | VASCHETTA RACC.ACQUA OSCAR MOOD TORTORA VERN | |
| 05002412.N | BASE CLOSURE OSCAR II BLACK | CHIUSURA FONDO OSCAR II NERO | |
| 05002418 | OSCAR MOOD TANK COVER RUBBER | GOMMINO COPERCHIO TANICA OSCAR MOOD | |
| 05002420.PSV | SUPERIOR FRAME MOOD PAINTED GUACAMOLE | CARENA SUPERIORE OSCAR MOOD PISTACCHIO VERN. | |
| 05002420.RV | SUPERIOR FRAME MOOD PAINTED RED | CARENA SUPERIORE OSCAR MOOD ROSSO VERN. | |
| 05002420.TRV | SUPERIOR FRAME MOOD PAINTED TAUPE | CARENA SUPERIORE OSCAR MOOD TORTORA VERN. | |
| 05002420.NOV | SUPERIOR FRAME MOOD MATT BLACK | CARENA SUPERIORE OSCAR MOOD NERO OPACO VERN. | |
| 05002422.NOV | PANEL SCREW CAP PAINTED MATT BLACK | TAPPO VITE CARENA SUP. OSCAR MOOD NERO OPACO V | |
| 05002422.PSV | PANEL SCREW CAP PAINTED GUACAMOLE | TAPPO VITE CARENA SUP. OSCAR MOOD PISTACCHIO VE | |
| 05002422.RV | PANEL SCREW CAP PAINTED RED | TAPPO VITE CARENA SUP. OSCAR MOOD ROSSO VERN. | |
| 05002422.TRV | PANEL SCREW CAP PAINTED TAUPE | TAPPO VITE CARENA SUP. OSCAR MOOD TORTORA VERN | |
| 06100500.C | CHROME OSCAR MOOD GROUP COVER | COPRIGRUPPO OSCAR MOOD CROMATO | |

# COMP. GRUPPO EROGAZIONE

# POURING GROUP PARTS

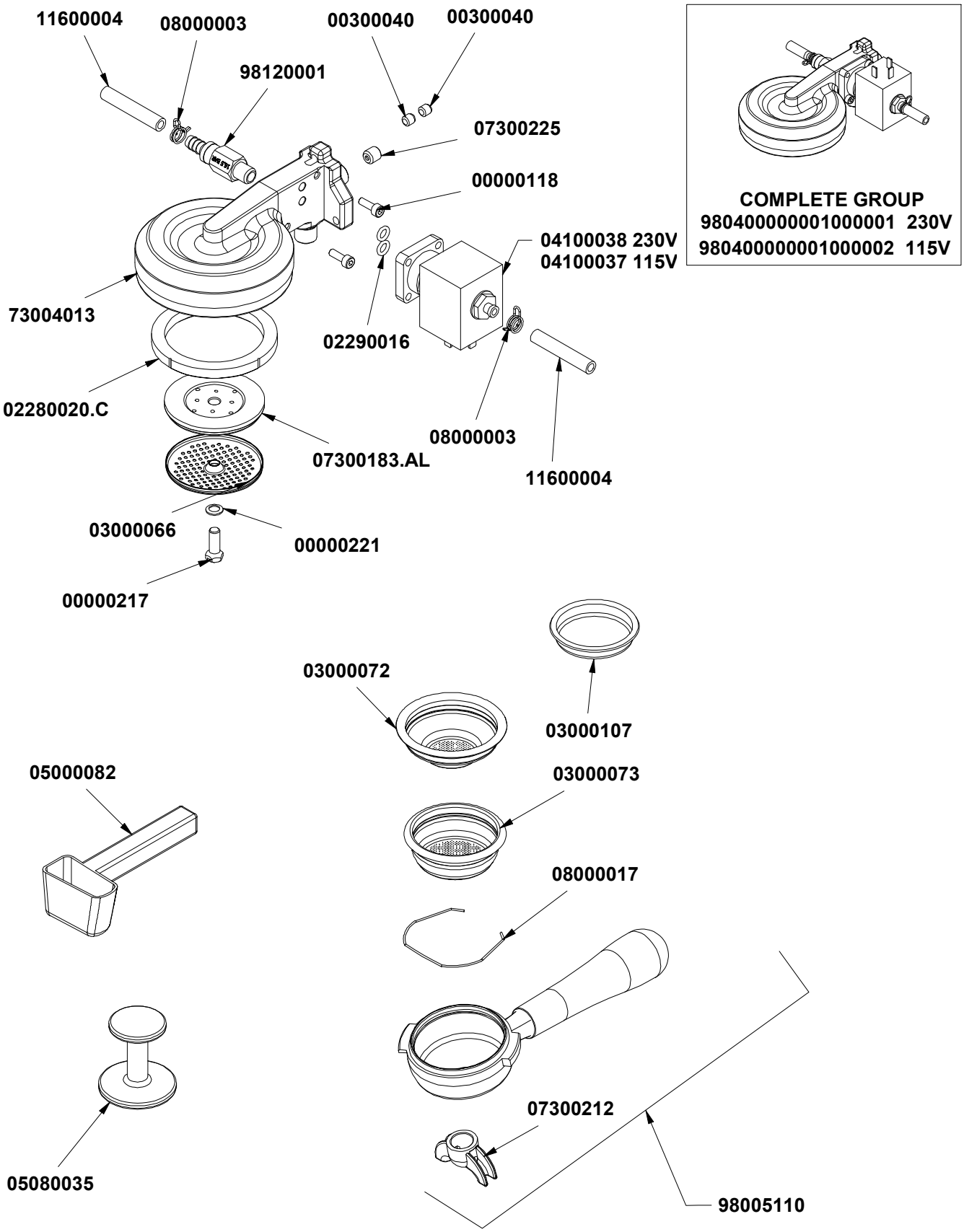

# COMP. GRUPPO EROGAZIONE

# POURING GROUP PARTS

| COD. | DESCRIPTION | DESCRIZIONE | VAL. |
|---|---|---|---|
| 00000118 | S/SHEX SOCKET CAP SCREW M4x12 5931 | VITE INOX M4x12 TCEI 5931 | |
| 00000217 | S/S SCREW TE CH9 + TC LT=20 FOR SHOWER | VITE INOX M6 LT=20 TE CH9 + TCx DOCCIA | |
| R00000217 | KIT-S/S SCREW TE CH9 + TC LT=20 FOR SHOWER - 10Pc: | KIT-VITE INOX M6 LT=20 + TCx DOCCIA - 10Pz | |
| 00000221 | S/S SECURITY FLAT WASHER INOX M6 CONICAL | RONDELLA DI SICUREZZA INOX M6 SCHNORR CONICA | |
| 00300040 | S/S GRUB SCREW M6X6 UNI 5923 | GRANO INOX M6x6 PUNTA PIANA | |
| 02280020.C | GROUP GASKET 72X57X6.8 TYPE C 72/75 ShA | GUARNIZ. SOTTOCOPPA 72X57X6.8 TIPO C 72/75 ShA | |
| R02280020.C | KIT-GROUP GASKET 72X57X6.8 ShA - 15Pcs | KIT-GUARNIZ. SOTTOCOPPA 72X57X6.8 TIPO C - 15Pz | |
| 02290016 | GASKET O RING D9,5 R5 SIL RED | GUARN. OR D 9,5 R5 SILICONE R. | |
| R02290016 | KIT-GASKET O RING D9,5 SIL RED - 30Pcs | KIT-GUARN. OR D 9,5 SILICONE R. - 30Pz | |
| 03000066 | S/S SHOWER 56X5,5X6 WELDED | DOCCIA INOX 56x5,5x 6 SALDATA Aisi304 | |
| R03000066 | KIT-S/S SHOWER 56X5,5X6 WELDED - 5Pcs | KIT-DOCCIA INOX 56x5,5x 6 SALDATA Aisi304 - 5Pz | |
| 03000072 | FILTER ONE COFFEE HIGH 7gr | FILTRO 1 CAFFE' ALTO 7gr. | |
| R03000072 | KIT-FILTER ONE COFFEE HIGH 7gr - 3Pcs | KIT-FILTRO 1 CAFFE' ALTO 7gr. - 3Pz | |
| 03000073 | FILTER TWO COFFEE HIGH 14gr | FILTRO 2 CAFFE' ALTO 14gr. | |
| R03000073 | KIT-FILTER TWO COFFEE HIGH 14gr - 3Pcs | KIT-FILTRO 2 CAFFE' ALTO 14gr. - 3Pz | |
| 03000107 | BLIND FILTER | FILTRO CIECO | |
| R03000107 | KIT-BLIND FILTER - 8Pcs | KIT-FILTRO CIECO - 8Pz | |
| 04100037 | 3WAY SOLENOID CONNECTOR HOSE SUPPORT WASTE | E.V. NC 3VIE BASETTA SCAR. PORTAG.115V 60Hz VITONF' | |
| 04100038 | 3WAY SOLENOID CONNECTOR HOSE SUPPORT WASTE | E.V. NC 3VIE BASETTA SCAR. PORTAG.230V 50/60HzVITON | |
| R04100038 | KIT-3WAY SOLENOID CONNECTOR HOSE SUPPORT WAS | KIT -E.V. NC 3VIE BASETTA SCAR. PORTAG.230V50/60HZ V | |
| 05000082 | MEASUREMENT 1 DOSE GROUND COFFEE | MISURINO CAFFE' MACINATO 1DOSE | |
| 05080035 | COFFEE TAMPER ABS BLACK | PRESSA CAFFE' ABS NERO | |
| 07300183.AL | GROUP DIFFUSER h=3 ALLUMINUM | PADIGLIONE GRUPPO H=3 ALLUMINIO | |
| 07300212 | 2WAY SMALL NOZZLE | BECCO DUE VIE PICCOLO | |
| 07300225 | GIGLEUR M8X8 F.3 | GIGLER M8x8 F.3 | |
| 08000003 | HOSE CLAMP D9,1 | FASCETTA STRINGITUBO D9.1 | |
| 08000017 | S/S FILTER LOCKING SPRING | MOLLA BLOCCA FILTRO ACC.INOX | |
| R08000017 | KIT-S/S FILTER LOCKING SPRING - 15Pcs | KIT-MOLLA BLOCCA FILTRO ACC.INOX - 15Pz | |
| 11600004 | SILICONE PIPE 5x9 60Sh PEROX WHITE SEMITRASPAREN | TUBO SILICONE 5x9 70Sh PEROX TRASPARENTE(1mt=50gı | |
| 73004013 | CHROME DISPENSING GROUP OT-58 OSCAR/MUSICA | GRUPPO EROGAZ. CROMATO OT-58 OSCAR/MUSICA | |
| 98005110 | INCLINED FILTER-HOLDER BODY N.S. + WOOD KNOB | CORPO PORTAF. INCL. NS BECCO PICCOLO + MANOPOLA | |
| 980400000001000001 | DISPENSING GROUP SET OSCAR II 230V | ASS. GR. EROG. OSCAR II 230V | |
| 980400000001000002 | DISPENSING GROUP SET OSCAR II 115V | ASS. GR. EROG. OSCAR II 115V | |
| 98120001 | NEPLAX VITON 16,5 BAR VALVE 1/8 HOSE CLAMP | VALVOLA NEPLAX VITON 16,5 BAR 1/8 - PORTAGOMMA | |
| R98120001 | KIT-NEPLAX VITON 16,5 BAR VALVE 1/8 HOSE CLAMP - 2F | KIT-VALVOLA NEPLAX VITON 16,5 BAR 1/8 - PORTAGOMM/ | |

# COMPONENTI TELAIO

# FRAME PARTS

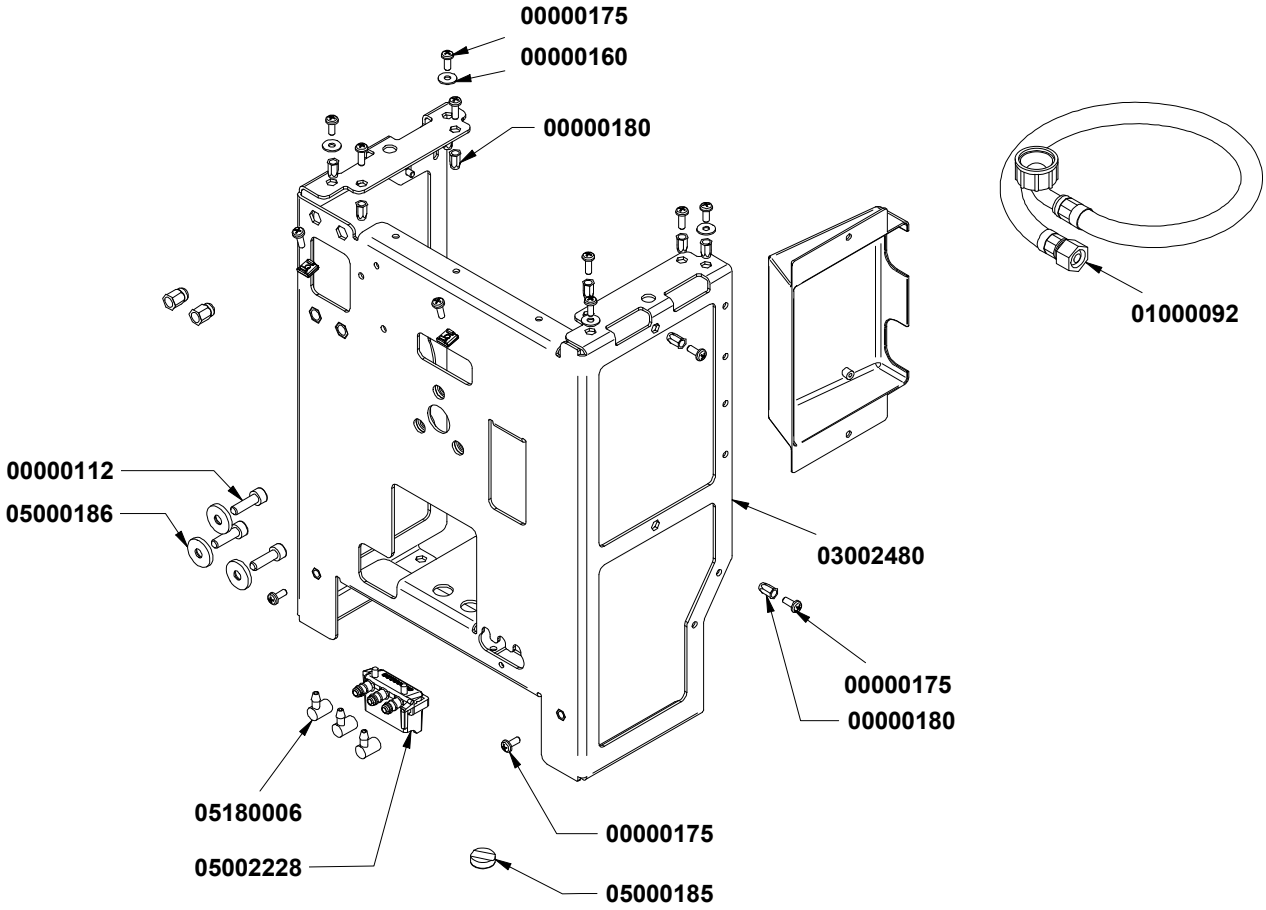


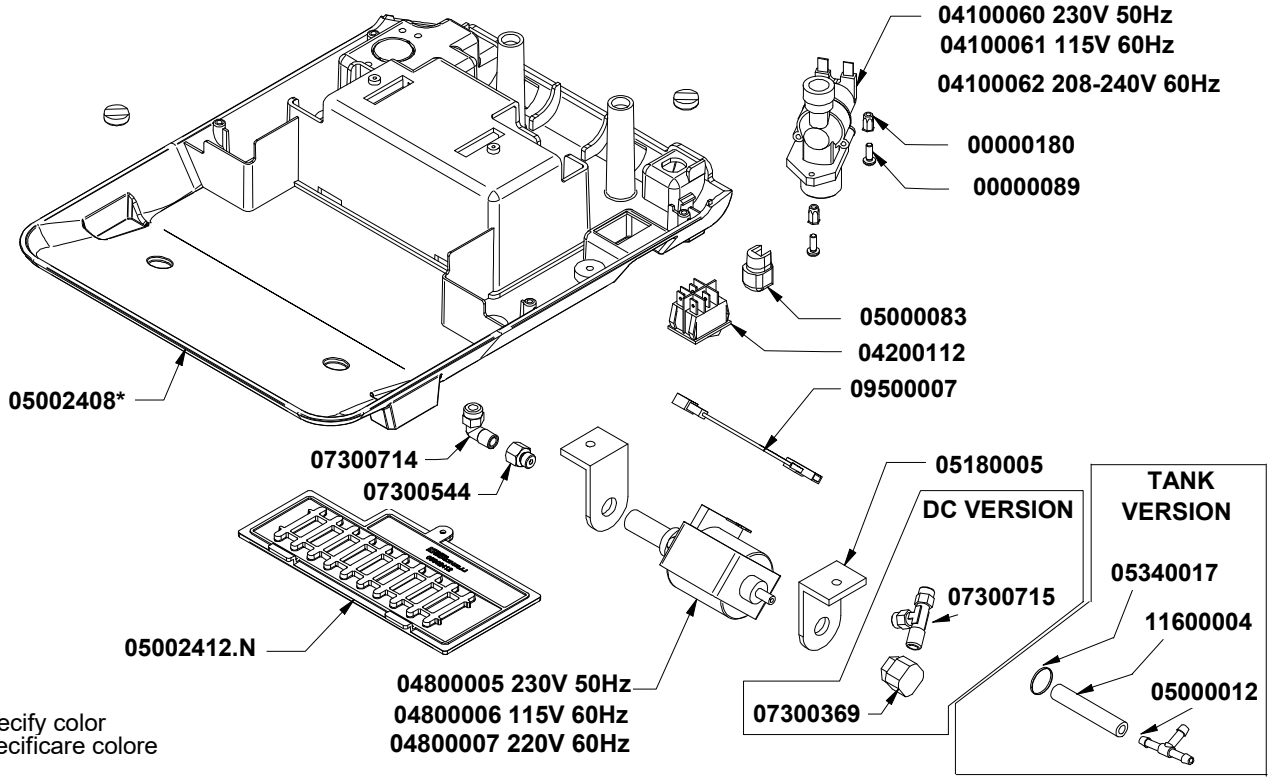


*Specify color
Specificare colore

# COMPONENTI TELAIO

# FRAME PARTS

| COD. | DESCRIPTION | DESCRIZIONE | VAL. |
|---|---|---|---|
| 00000089 | S/S CROSSHEAD CAP SCREW M4x12 DIN7985 | VITE INOX M4x12 TC TCR DIN7985 | |
| 00000112 | S/S SOCKET SCREW M6x20 UNI 5931 | VITE INOX M6x20 TCEI UNI 5931 | |
| 00000160 | S/S WASHER D4X12 UNI 6593 | RONDELLA INOX M4 D4x12x1 UNI 6593 | |
| 00000175 | S/S CROSS HEAD CAP SCREW M4X10 | VITE INOX M4x10 TC TCR | |
| 00000180 | HEX RIVET NUT M4 | RIVETTO M4 ESAGONALE ER | |
| 01000092 | 3/8F-3/4F90D WATER CHARGE PIPE 1,5mt + FILTER | TUBO CARICO ACQUA 1,5 mt EPDM 3/8F OTT - 3/4F 9GHIEF | |
| R01000092 | KIT-3/8F-3/4F90D WATER CHARGE PIPE 1,5mt+ FILTER-1F | KIT -TUBO CARICO ACQUA 1,5 MT EPDM 3/8F OTT3/4F 9 ** | |
| 03002480 | FRAME OSCAR MOOD | TELAIO MACCHINA OSCAR MOOD | |
| 04100060 | 2WAY SOLENOID 3/4-JG 6 STRAIGHT+FILTR F.2,5 230V50/ | E.V. NC 2VIE 3/4-JG 6 DIRITTA REGOL+FILTR F.2,5230V 50/ | |
| R04100060 | KIT-2WAY SOLENOID 3/4-JG 6 STRAIGHT+FILTR F.2,5 - 1F | KIT-E.V. NC 2VIE 3/4-JG 6 DIRITTA REGOL+FILTR F.2,- 1Pz* | |
| 04100061 | 2WAY SOLENOID 3/4-JG 6 STRAIGHT+FILTR F.2,5 115V60 | E.V. NC 2VIE 3/4-JG 6 DIRITTA REGOL+FILTR F.2,5115V 60 | |
| 04100062 | 2WAY SOLENOID 3/4-JG6 STRAIGHT ULREGOL+FILTR F.2 | E.V. NC 2VIE 3/4-JG6 DIRIT. ULREGOL+FILTR F.2,5208/240 | |
| 04200112 | RED LIGHT 0/1 BIPOLAR SWITCH UL 16A | INTERRUTTORE BIPOLARE LUMINOSO ROSSO 0/1RETTAN | |
| 04800005 | VIBRATION PUMP V230 50Hz 48W | POMPA ELETTROMECC. 230V 50Hz 48W | |
| R04800005 | KIT-VIBRATION PUMP V230 50Hz 48W - 1Pcs | KIT-POMPA ELETTROMECC. 230V 50Hz 48W - 1Pz | |
| 04800006 | VIBRATION PUMP 115V 60Hz 1W | POMPA ELETTROMECC. 120V 60Hz 41W | |
| 04800007 | ELECTROMECHANICAL PUMP 220V 60Hz 64W | POMPA ELETTROMECCANICA 220V 60Hz 64W | |
| R04800007 | KIT-ELECTROMECHANICAL PUMP 220V 60Hz 64W-1Pcs | KIT -POMPA ELETTROMECCANICA 220V 60HZ 64W-1PZ** A | |
| 05000012 | TUBE FASTENING TS 6 | RACCORDO PORTATUBO TS 6 | |
| 05000083 | CABLE LOCK SR 11-2 BLACK | BLOCCACAVO SR 11-2 NERO | |
| 05000185 | FOOT OSCAR | PIEDINO OSCAR | |
| 05000186 | H3 D6,3/20 NYLON INSERT OSCAR GROUP BLACK | INSERTO NYLON GR. OSCAR h3 D.6,3/20 NERO | |
| 05002228 | EXHAUST MANIFOLD - 3xØ6 | COLLETTORE SCARICO ATTACCHI 3xD.6 | |
| 05002408.NOV | INFERIOR FRAME MOOD PAINTED MATT BLACK | CARENA INFERIORE OSCAR MOOD NERO OPACO VERNIC | |
| 05002408.PSV | INFERIOR FRAME MOOD PAINTED PISTACHIO | CARENA INFERIORE OSCAR MOOD PISTACCHIO VERNIC. | |
| 05002408.RV | INFERIOR FRAME MOOD PAINTED RED | CARENA INFERIORE OSCAR MOOD ROSSO VERNIC. | |
| 05002408.TRV | INFERIOR FRAME MOOD DOVE GREY | CARENA INFERIORE OSCAR MOOD TORTORA VERNIC. | |
| 05002412.N | BASE CLOSURE OSCAR II BLACK | CHIUSURA FONDO OSCAR II NERO | |
| 05180005 | L-SHAPED PUMP BRACKET | SUPPORTO POMPA AD L | |
| 05180006 | SMALL PIPE 90° FOR PUMP | PIPETTA PORTAGOMMA 90° x POMPA | |
| 07300369 | DIRECT ATTACHMENT FITTING FOR ELECTROMECHANIC | RACCORDO ATTACCO DIRETTO PER POMPAELETTROME | |
| 07300544 | MF 1/8" ES 14 FOR S/S FILTER D8 | PROLUNGA MF 1/8" ES 14 x FILTRO INOX D8 | |
| 07300714 | L FITTING 1/8 M - FITTINGS.6 | RACCORDO L 1/8 M - CALZAM.6 | |
| R07300714 | KIT-L FITTING 1/8 M - FITTINGS.6 - 6Pcs | KIT-RACCORDO L 1/8 M - CALZAM.6 - 6Pz | |
| 07300715 | T FITTING 1/8 M -FITTINGS.6 -FITTINGS.6 | RACCORDO T 1/8 M -CALZAM.6 - CALZAM.6 | |
| 09500007 | 2MMT 100°C THERMAL PROTECTION | TERMOPROTETTORE 2MMT 100°C | |
| 11600004 | SILICONE PIPE 5x9 60Sh PEROX WHITE SEMITRASPAREN | TUBO SILICONE 5x9 70Sh PEROX TRASPARENTE(1mt=50g | |

# GRUPPO IDR.+LANCIA VAPORE

# HYDR. GROUP+STEAM WAND

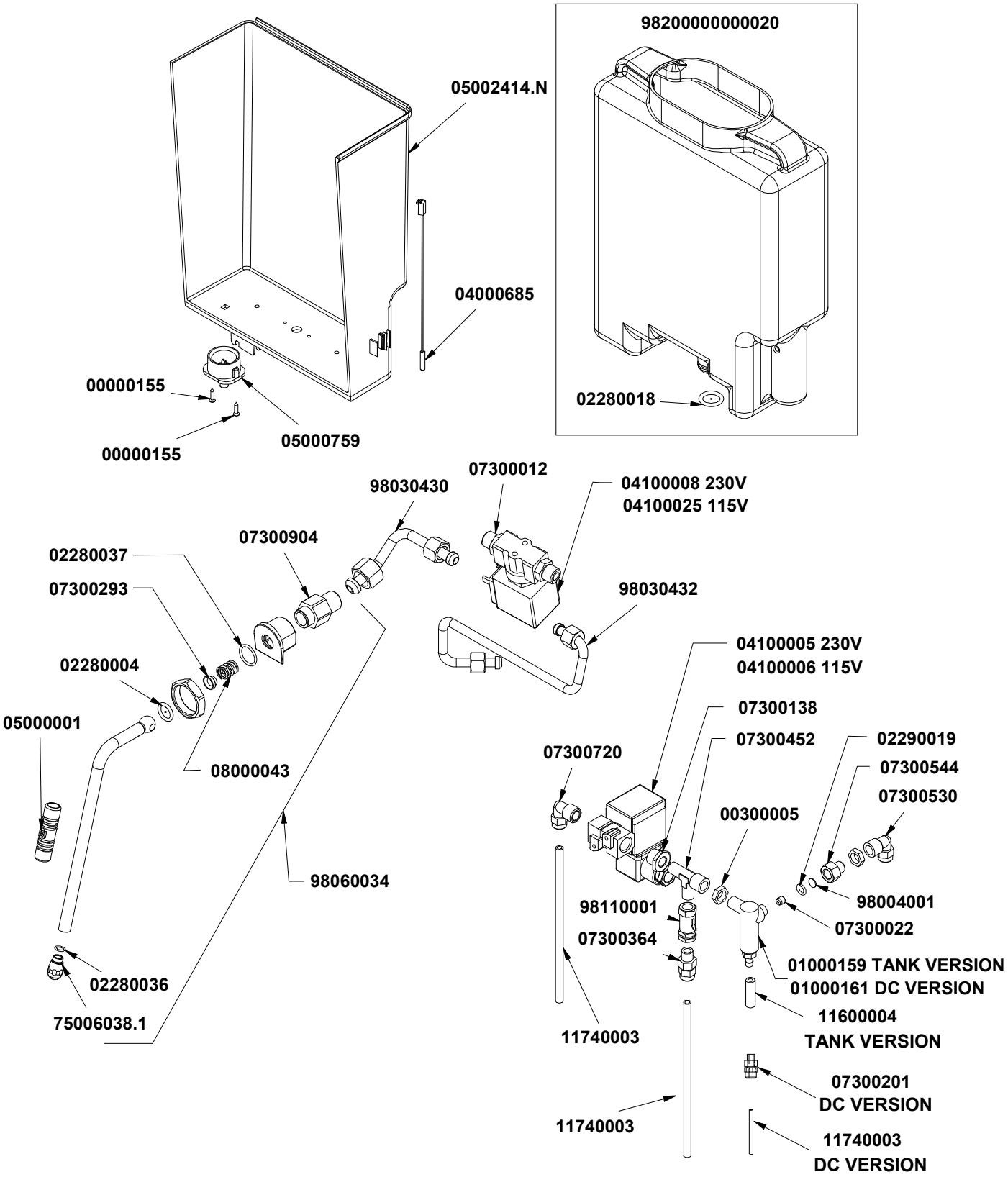


T.04

# GRUPPO IDR.+LANCIA VAPORE

# HYDR. GROUP+STEAM WAND

| COD. | DESCRIPTION | DESCRIZIONE | VAL. |
|---|---|---|---|
| 05002414.N | TANK SUPPORT OSCAR II BLACK | SOSTEGNO TANICA OSCAR II NERO | |
| 07300201 | CYLIND. FITTING 6/4 M6 340/M | RACCORDO CIL. 6/4 M6 340/M | |
| 08000043 | SPRING FOR ARTICULATED WAND D.1.6 D.11.9x16.2 4CO | MOLLA PER LANCIA SNODATA FILO D.1.6 D.11.9x16.2 4SPI | |
| 00000155 | S/S SCREW 3x12 TSPTCR DIN 7505 A | VITE INOX TRUCIOL. 3x12 TSP TCR 18-8 DIN 7505 A | |
| 00300005 | BRASS NUT 1/8 GAS D4 ADD 22.07.96 CH13 | DADO OT 1/8 GAS AGG.22.07.96 SPESS.4 CH13 | |
| 01000159 | R ADJ BY-PASS FOR MOTOR PUMP WTH OR/SPRING E L | BY-PASS DX REG. x ELETTROPOMPA CON OR / MOLLA "E" | |
| R01000159 | KIT-BYPASS FOR MOTOR PUMP WTH OR/SPRING - 1Pcs | KIT-BY-PASS DX REG. x ELETTROPOMPA CON OR / MOLLA | |
| 01000161 | ADJUSTABLE RIGHT BY-PASS FOR ENGINE PUMP DIREC | BY-PASS DESTRO REGOLABILE PER ELETTROPOMPA ATT | |
| 02280004 | GASKET O RING 115 D17 EP 856 x SWIVEL STEAM PIPE | GUARN. OR 115 D.17 EP856 SNODO LANCIA | |
| R02280004 | KIT-GASKET O RING 115 D17 EP 856 x STEAM PIPE - 55Pc | KIT-GUARN. OR 115 D.17 EP856 SNODO LANCIA - 55Pz | |
| 02280018 | RED SILICON GASKET O RING Sh70 | GUARN. OR R11 D19 SILICONE ROSSO Sh70 | |
| 02280036 | O RING FOR STEAM WAND NOZZLE D6x1.2 EPDM70 500 | GUARN. OR x BECCO LANCIA VAP. DI 6x1.2 EPDM70(CONF | |
| R02280036 | KIT-O RING FOR STEAM WAND NOZZLE D6x1.2 EPDM - 65 | KIT-GUARN. OR x BECCO LANCIA VAP. D. 6x1.2 EPDM- 65P | |
| 02280037 | GASKET O-RING JOINT LOCK 16x2 NBR70 | GUARN. OR CHIUSURA SNODO 16x2 NBR70 | |
| R02280037 | KIT-GASKET O RING JOINT LOCK 16x2 NBR - 45Pcs | KIT-GUARN. OR CHIUSURA SNODO 16x2 NBR - 45Pz | |
| 02290019 | GASKET O-RING LOWER PISTON R6 DF801 VITON | GUARN. OR R6 DF801 VITON | |
| R02290019 | KIT-GASKET O-RING LOWER PISTON DF801 VITON - 20Pc | KIT-GUARNIZIONE OR R6 DF801 VITON - 20Pz | |
| 04000685 | TANK REED SENSOR 4x19mm OSCAR II | SENSORE REED 4X19 x OSCAR II TANICA (FRAGILE-MANE | |
| R04000685 | KIT-TANK REED SENSOR 4x19mm - 1Pcs | KIT-SENSORE REED 4X19 TANICA - 1Pz | |
| 04100005 | 2WAY SOLENOID 1/4-1/4 220V 50/60Hz F2 CE TH 1xM4 | E.V. NC 2VIE 1/4-1/4 220-230V 50/60Hz EPDM F2 CEPIEDINC | |
| R04100005 | KIT-2WAY SOLENOID 1/4-1/4 220V 50/60Hz F2 - 1Pcs | KIT-E.V. NC 2VIE 1/4-1/4 220-230V 50/60Hz EPDM- 1Pz | |
| 04100006 | 2WAY SOLENOID 1/4-1/4 110-120V 60Hz F2 UL TH 1xM4 | E.V. NC 2VIE 1/4-1/4 110-120V 60Hz EPDM F2 ULPIEDINO FI | |
| 04100008 | 3WAY SOLENOID 1/4-1/4 1/8 240V50/60hz F3 UL TH2xM5 | E.V. NC 3VIE 1/4-1/4 SCAR. 1/8 220V 50Hz-240V 60HzRUBY | |
| R04100008 | KIT-3WAY SOLENOID 1/4-1/4 1/8 240V50/60hz F3UL TH2xM | KIT -E.V. NC 3VIE 1/4-1/4 SCAR. 1/8220V 50HZ-240V60HZ RU | |
| 04100025 | 3WAY SOLENOID 1/4-1/4 DIS 1/8110-120V50/60Hz F3 TH 2 | E.V. NC 3VIE 1/4-1/4 SCAR. 1/8110-120V 50/60HzRUBY F3 U | |
| 05000001 | RUBBER PROTECTION FOR STEAMWAND D10 | GOMMINO PROTEZIONE LANCIA D.10 | |
| R05000001 | KIT-RUBBER PROTECTION FOR STEAMWAND D10 - 10Pc | KIT-GOMMINO PROTEZIONE LANCIA D.10 - 10Pz | |
| 05000759 | WATER CONTAINER COLLECTOR 5LT MICROBAR | COLLETTORE CONTENITORE ACQUA 5LT MICROBAR | |
| 07300012 | FITTING 1/4 1/4M-1/4M Aisi316 | RACCORDO 1/4M-1/4M + SEDE OR INOX Aisi316 | |
| 07300022 | DISPENSING GIGLEUR M 6x6 F0.8 ADD. 28.05.93 | GIGLER EROGAZIONE M 6x6 F.0.8 | |
| 07300138 | FITTING ADAPTER 1/4M-1/8F ES.17 AGG.29.05.96 OT-58 | RIDUZIONE 1/4"M - 1/8"F ES.17 AGG. 29.05.96 OT-58 | |
| 07300293 | ARTICULATED BUSHING AG.25.06.96 OT-57 | BUSSOLA SNODO AG.25.06.96 OT-57 | |
| R07300293 | KIT-ARTICULATED BUSHING - 15Pcs | KIT-BUSSOLA SNODO - 15Pz | |
| 07300364 | STRAIGHT FITTING 1/8 M CON. - FITTING.6 340 | RACCORDO DIR. 1/8 M CON. - CALZAM.6 340 | |
| R07300364 | KIT-STRAIGHT FITTING 1/8 M CON. - FITTING.6 340 - 8Pcs | KIT-RACCORDO DIR. 1/8 M CON. - CALZAM.6 - 8Pz | |
| 07300452 | T FITTING 1/8 M-M-F | RACCORDO T 1/8 M-M-F | |
| 07300530 | FITTING L 1/8 F A CALZ. 347 6 | RACCORDO L 1/8 F A CALZ. 347 6 | |
| R07300530 | KIT-FITTING L 1/8 F A CALZ. 347 6 -5Pcs | KIT -RACCORDO L 1/8 F A CALZ. 347 6-5PZ** AD ESAURIME | |
| 07300544 | MF 1/8" ES 14 FOR S/S FILTER D8 | PROLUNGA MF 1/8" ES 14 x FILTRO INOX D8 | |
| 07300720 | L FITTING 1/4 M - FITTINGS | RACCORDO L 1/4 M - CALZAM. | |
| 07300904 | COLD STEAM WAND CONNECTION | ATTACCO LANCIA VAPORE FREDDA OSCAR MOOD | |
| 11600004 | SILICONE PIPE 5x9 60Sh PEROX WHITE SEMITRASPAREN | TUBO SILICONE 5x9 70Sh PEROX TRASPARENTE(1mt=50g | |
| 11740003 | CALIBRATED TEFLON PIPE 6/4 50m | TUBO TEFLON NSF 6/4 CALIBRATO1 matassa = 50mt | |
| 75006038.1 | STEAM NOOZLE M8,65X0,75 F1,2 ESAG.12 | BECCO VAPORE M8,65x0,75 F. 1,2 ESAG.12 | |
| 98004001 | S/S FILTER D8 | FILTRO INOX DIAM. 8 | |
| 98030430 | BOILER-STEAM SOL. VALVE PIPE | TUBO CALDAIA - EV VAPORE OSCAR MOOD | |
| 98030432 | SOL.VALVE-STEAM WAND PIPE | TUBO EV VAPORE - LANCIA VAPORE OSCAR MOOD | |
| 98060034 | COLD STEAM WAND KIT PROFESSIONAL | KIT LANCIA VAPORE FREDDA OSCAR MOOD PROFESSION | |
| 98110001 | RETURN VALVE 1/8 F-FOT-58 | VALVOLA RITEGNO COMPL. 1/8 F-F OT-58 | |
| R98110001 | KIT-RETURN VALVE 1/8 F-F - 3Pcs | KIT-VALVOLA RITEGNO COMPL. 1/8 F-F - 3Pz | |

# GRUPPO IDR.+LANCIA VAPORE

# HYDR. GROUP+STEAM WAND

| COD. | DESCRIPTION | DESCRIZIONE | VAL. |
|---|---|---|---|
| 98200000000020 | 3LT WATER TANK SET WITH FLOAT | ASS. TANICA ACQUA 3LT CON GALLEGGIANTE | |
| R98200000000020 | KIT-3LT WATER TANK SET WITH FLOAT - 1Pcs | KIT-ASS. TANICA ACQUA 3LT CON GALLEGGIANTE - 1Pz | |

# COMPONENTI SILENT PACK

# PARTS SILENT PACK

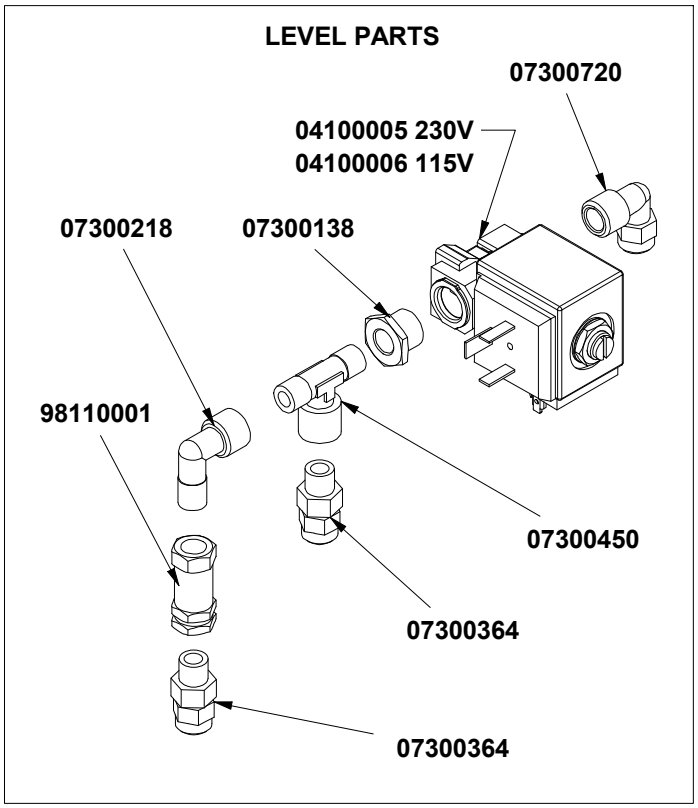


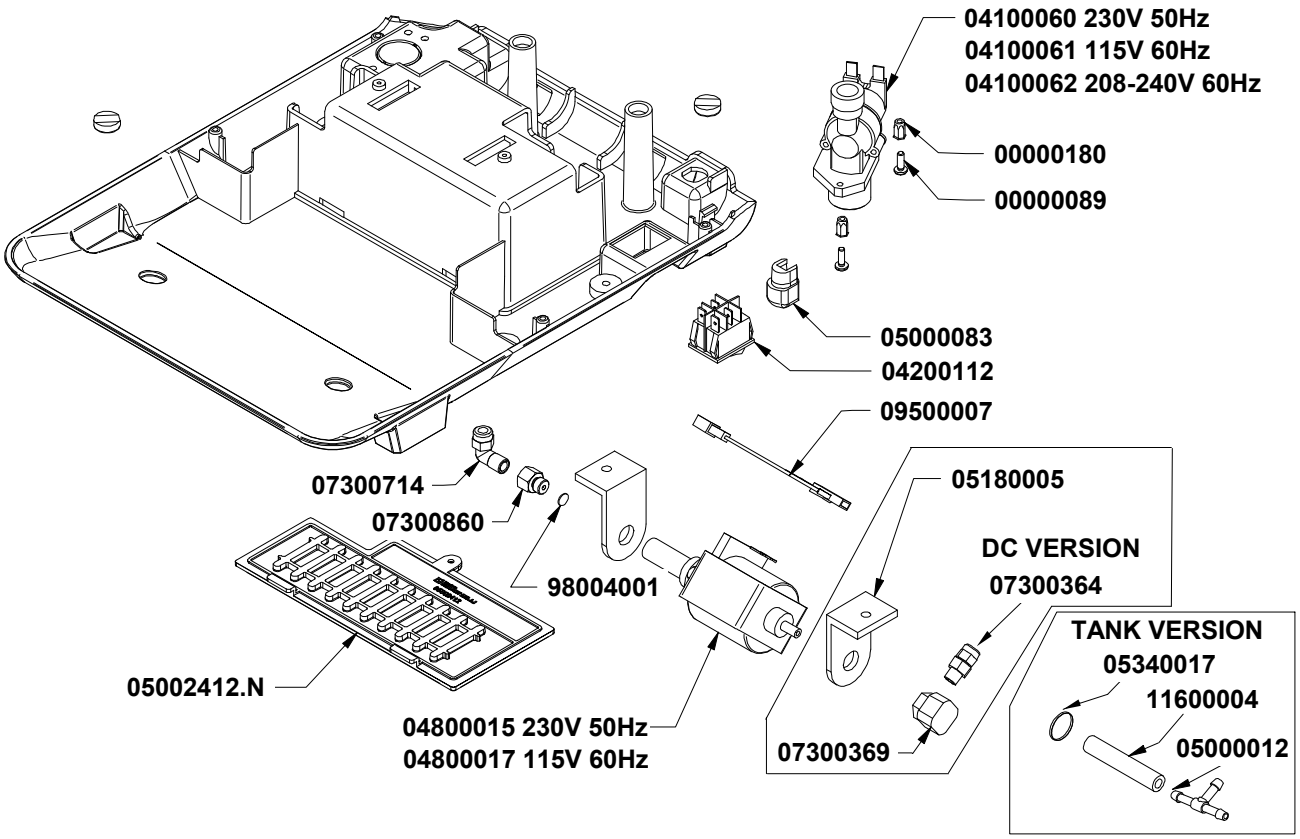

# COMPONENTI SILENT PACK

# PARTS SILENT PACK

| COD. | DESCRIPTION | DESCRIZIONE | VAL. |
|---|---|---|---|
| 00000089 | S/S CROSSHEAD CAP SCREW M4x12 DIN7985 | VITE INOX M4x12 TC TCR DIN7985 | |
| 00000180 | HEX RIVET NUT M4 | RIVETTO M4 ESAGONALE ER | |
| 04100005 | 2WAY SOLENOID 1/4-1/4 220V 50/60Hz F2 CE TH 1xM4 | E.V. NC 2VIE 1/4-1/4 220-230V 50/60Hz EPDM F2 CEPIEDINC | |
| R04100005 | KIT-2WAY SOLENOID 1/4-1/4 220V 50/60Hz F2 - 1Pcs | KIT-E.V. NC 2VIE 1/4-1/4 220-230V 50/60Hz EPDM- 1Pz | |
| 04100006 | 2WAY SOLENOID 1/4-1/4 110-120V 60Hz F2 UL TH 1xM4 | E.V. NC 2VIE 1/4-1/4 110-120V 60Hz EPDM F2 ULPIEDINO FI | |
| 04100060 | 2WAY SOLENOID 3/4-JG 6 STRAIGHT+FILTR F.2,5 230V50, | E.V. NC 2VIE 3/4-JG 6 DIRITTA REGOL+FILTR F.2,5230V 50/ | |
| R04100060 | KIT-2WAY SOLENOID 3/4-JG 6 STRAIGHT+FILTR F.2,5 - 1P | KIT-E.V. NC 2VIE 3/4-JG 6 DIRITTA REGOL+FILTR F.2,- 1Pz* | |
| 04100061 | 2WAY SOLENOID 3/4-JG 6 STRAIGHT+FILTR F.2,5 115V60 | E.V. NC 2VIE 3/4-JG 6 DIRITTA REGOL+FILTR F.2,5115V 60H | |
| 04100062 | 2WAY SOLENOID 3/4-JG6 STRAIGHT ULREGOL+FILTR F.2 | E.V. NC 2VIE 3/4-JG6 DIRIT. ULREGOL+FILTR F.2,5208/240V | |
| 04200112 | RED LIGHT 0/1 BIPOLAR SWITCH UL 16A | INTERRUTTORE BIPOLARE LUMINOSO ROSSO 0/1RETTAN | |
| 05000012 | TUBE FASTENING TS 6 | RACCORDO PORTATUBO TS 6 | |
| 04800015 | SILENT PUMP 220/240V 50Hz 35W | POMPA ELETTROMECC. 220/240V 50Hz SILENT 35W | |
| 04800017 | SILENT PUMP 120V 60Hz 40W | POMPA ELETTROMECC. 120V 60Hz SILENT 40W | |
| 05000083 | CABLE LOCK SR 11-2 BLACK | BLOCCACAVO SR 11-2 NERO | |
| 05002412.N | BASE CLOSURE OSCAR II BLACK | CHIUSURA FONDO OSCAR II NERO | |
| 05180005 | L-SHAPED PUMP BRACKET | SUPPORTO POMPA AD L | |
| 07300138 | FITTING ADAPTER 1/4M-1/8F ES.17 AGG.29.05.96 OT-58 | RIDUZIONE 1/4"M - 1/8"F ES.17 AGG. 29.05.96 OT-58 | |
| 07300218 | FITTING L 1/8 M-F 458 | RACCORDO L 1/8 M-F 458 | |
| 07300364 | STRAIGHT FITTING 1/8 M CON. - FITTING.6 340 | RACCORDO DIR. 1/8 M CON. - CALZAM.6 340 | |
| R07300364 | KIT-STRAIGHT FITTING 1/8 M CON. - FITTING.6 340 - 8Pcs | KIT-RACCORDO DIR. 1/8 M CON. - CALZAM.6 - 8Pz | |
| 07300369 | DIRECT ATTACHMENT FITTING FOR ELECTROMECHANIC | RACCORDO ATTACCO DIRETTO PER POMPAELETTROME | |
| 07300450 | FITTING T 1/8 M-F-M OT-57 | RACCORDO T 1/8 M-F-M OT-57 | |
| 07300714 | L FITTING 1/8 M - FITTINGS.6 | RACCORDO L 1/8 M - CALZAM.6 | |
| R07300714 | KIT-L FITTING 1/8 M - FITTINGS.6 - 6Pcs | KIT-RACCORDO L 1/8 M - CALZAM.6 - 6Pz | |
| 07300720 | L FITTING 1/4 M - FITTINGS | RACCORDO L 1/4 M - CALZAM. | |
| 07300860 | POWER GIGLER 1/8 M-F F.0,7 OT-58 | GIGLER ALIMENTAZIONE 1/8 M-F F.0,7 OT-58 | |
| 09500007 | 2MMT 100°C THERMAL PROTECTION | TERMOPROTETTORE 2MMT 100°C | |
| 11600004 | SILICONE PIPE 5x9 60Sh PEROX WHITE SEMITRASPAREN | TUBO SILICONE 5x9 70Sh PEROX TRASPARENTE(1mt=50gr | |
| 98004001 | S/S FILTER D8 | FILTRO INOX DIAM. 8 | |
| 98110001 | RETURN VALVE 1/8 F-FOT-58 | VALVOLA RITEGNO COMPL. 1/8 F-F OT-58 | |
| R98110001 | KIT-RETURN VALVE 1/8 F-F - 3Pcs | KIT-VALVOLA RITEGNO COMPL. 1/8 F-F - 3Pz | |

# COMP. GRUPPO CALDAIA

# BOILER GROUP PARTS

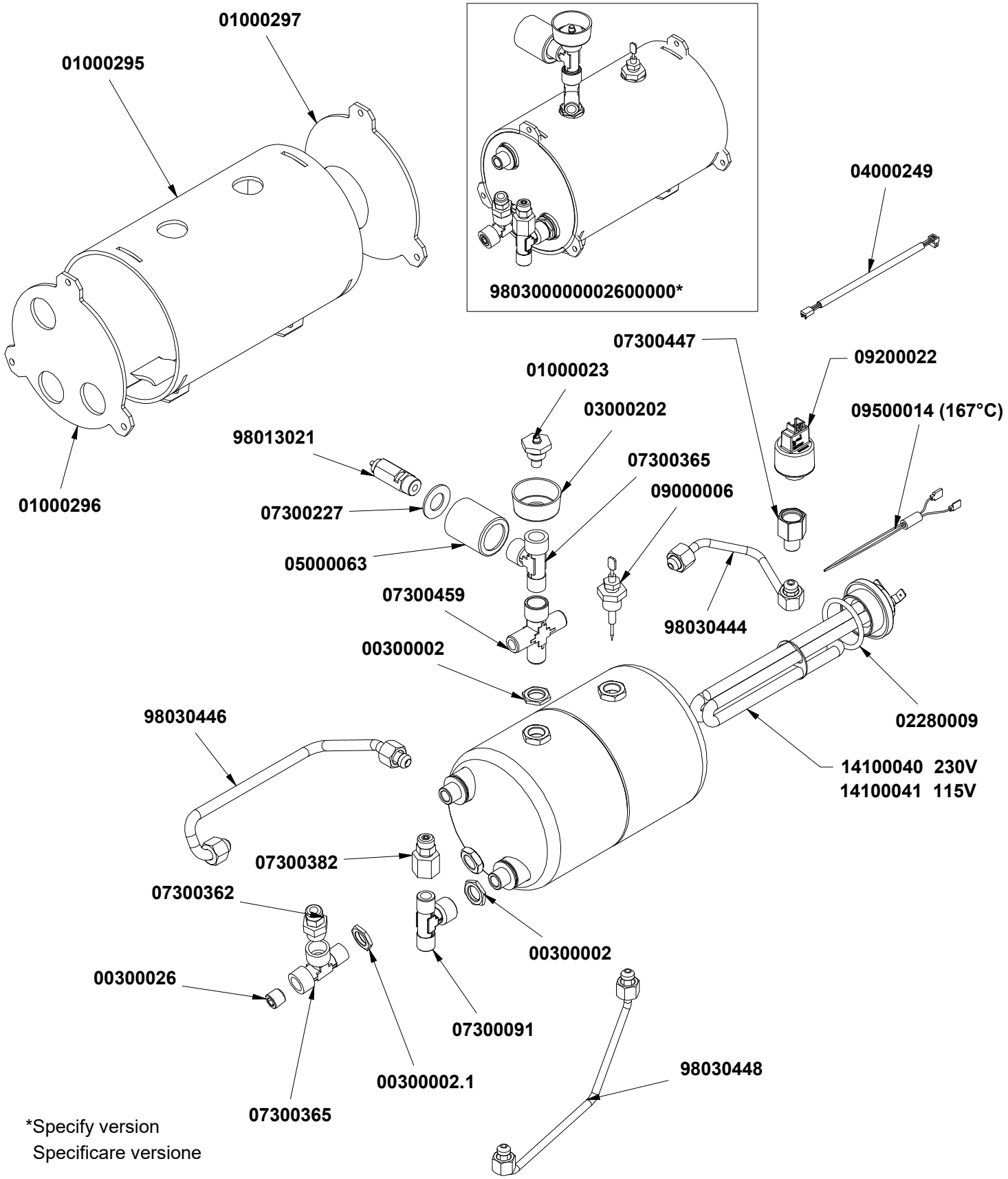


*Specify version
Specificare versione

# COMP. GRUPPO CALDAIA

# BOILER GROUP PARTS

| COD. | DESCRIPTION | DESCRIZIONE | VAL. |
|---|---|---|---|
| 00300002 | BRASS NUT 1/4 D3 CH18 | DADO OT 1/4 SPESS.3 CH18 AGG. 22.07.96 | |
| R00300002 | KIT-BRASS NUT 1/4 D3 - 15Pcs | KIT-DADO OT 1/4 SPESS.3 - 15Pz | |
| 00300002.1 | BRASS NUT 1/4 GAS D3 OVERSIZE 0.3mm CH18 | DADO OT 1/4 GAS MAGGIORATO 0.3mm SPESS.3 CH18 | |
| 00300026 | CONICAL TAP 1/4 GAS | TAPPO CONICO 1/4 GAS | |
| 01000023 | ANTI VACUUM VALVE | VALVOLINA SFIATO | |
| R01000023 | KIT-ANTI VACUUM VALVE - 3Pcs | KIT-VALVOLINA SFIATO - 3Pz | |
| 01000295 | | ISOLANTE CALDAIA OSCAR II MELAMMINA | |
| 01000296 | | ISOLANTE D.110 DX CALDAIA OSCAR II MELAMMINA | |
| 01000297 | | ISOLANTE D.110 SX CALDAIA OSCAR II MELAMMINA | |
| 02280009 | GASKET O RING 139/4131 D40 EP851 | GUARN. OR 139/4131 D.40 EP851 **AD ESAURIMENTODAR | |
| 03000202 | CONDENSATION TRAY MASTER | VASCHETTA RACCOGLI CONDENSA AGG. 07.06.97 | |
| 04000249 | 3POLE CONN CABLE RAST 2.5/MOLEX L = 400mm for PST | CAVO COLL.3P RAST 2,5/MOLEX L.400mm x TRASDUTTOR | |
| 05000063 | SAFETY VALVE COVER PA6 | COPRI VALVOLA SICUREZZA PA6 | |
| R05000063 | KIT-SAFETY VALVE COVER PA6 - 8Pcs | KIT-COPRI VALVOLA SICUREZZA PA6 - 8Pz | |
| 07300091 | T FITTING MFM 1/4 CYLIN. | RACCORDO T 1/4 M-F-M CILIN. | |
| 07300227 | BRASS WASHER D.26X13,5X1,5 ADD.5.06.03 | RONDELLA OT D.26x13,5x1,5 AGG.5.06.03 | |
| 07300362 | STRAIGHT FITTING 1/4 M-FITTINGS.6 340 | RACCORDO DIR. 1/4 M-CALZ.6 340 | |
| 07300365 | T FITTING 1/4 FFM | RACCORDO T 1/4 M-F-F | |
| 07300382 | STRAIGHT FITTING 1/4 F | RACCORDO DIR. 1/4 F - CALZAM. 6 | |
| 07300447 | OSCAR MOOD PRESSURE SENSOR FITTING | RACCORDO SENSORE PRESSIONE OSCAR MOOD | |
| 07300459 | CROSS FITTING 1/4 M-M-M-F OT-58 NIK | RACCORDO CROCE 1/4 M-M-M-F OT-58 NIK | |
| 09000006 | COMPLETE AUTOLEVEL PROBE L70 + PTFE | SONDA AUTOLIVELLO COMP. L=70 CON GOLA | |
| R09000006 | KIT-COMPLETE AUTOLEVEL PROBE L70 + PTFE - 1Pcs | KIT-SONDA AUTOLIVELLO COMP. L=70 CON GOLA - 1Pz** | |
| 09200022 | PRESSURE TRANSDUCER 0-4 BAR 3/8 | TRASDUTTORE DI PRESSIONE 0-4 BAR 3/8 | |
| R09200022 | KIT-PRESSURE TRANSDUCER 0-4 BAR 3/8-1Pcs | KIT -TRASDUTTORE DI PRESSIONE 0-4 BAR 3/8-1PZ | |
| 09500014 | HEATING ELEMENT THERMAL PROTECTION G5 167°C 16 | TERMOPROTETTORE x RESISTENZA G5 167°C 16A 250V U | |
| R09500014 | KIT-HEATING ELEMENT THERMAL PROTECTION - 2Pcs | KIT-TERMOPROTETTORE x RESISTENZA G5 167°C 16A 25( | |
| 14100040 | BOILER HEATING ELEMENT OSCAR 1' 1200W 230V +T.P. | RESISTENZA CALDAIA OSCAR 1" 1200W 230V +TUBOPORT | |
| R14100040 | KIT-BOILER HEATING ELEMENT 1200W 230V - 1Pcs | KIT-RESISTENZA CALDAIA 1200W 230V +T.P. - 1Pz | |
| 14100041 | BOILER HEATING ELEMENT 1 1200W 115V + T.P. | RESISTENZA CALDAIA OSCAR 1 1200W 115V +TUBOPORT. | |
| 98013021 | SAFETY VALVE A5 1/4 REG 2,1 BAR OT-58 | VALVOLA SICUREZZA A5 1/4 TARATA 2,1 BAR OT-58 | |
| R98013021 | KIT-SAFETY VALVE A5 1/4 REG 2,1 BAR - 2Pcs | VALVOLA SICUREZZA A5 1/4 TARATA 2,1 BAR - 2Pz | |
| 980300000002600001 | BOILER ASSEMBLY 230V | ASS. CALDAIA OSCAR II 230V | |
| 980300000002600002 | BOILER ASSEMBLY 115V | ASS. CALDAIA OSCAR II 115V | |
| 98030444 | PRESSURE GAUGE-BOILER TUBE OSCAR II | TUBO PRESSOST-CALDAIA OSCAR II | |
| 98030446 | SUPERIOR DISPENSING GR-BOILER TUBE OSCAR II | TUBO SUPERIORE GRUPPO EROG.- CALDAIA OSCAR II | |
| 98030448 | INFERIOR DISPENSING GR-BOILER TUBE OSCAR II | TUBO INFERIORE GRUPPO EROG.- CALDAIA OSCAR II | |

# COMP. ELETTRICI ED ELETTR.

# ELECTRIC AND ELECTRONIC PARTS

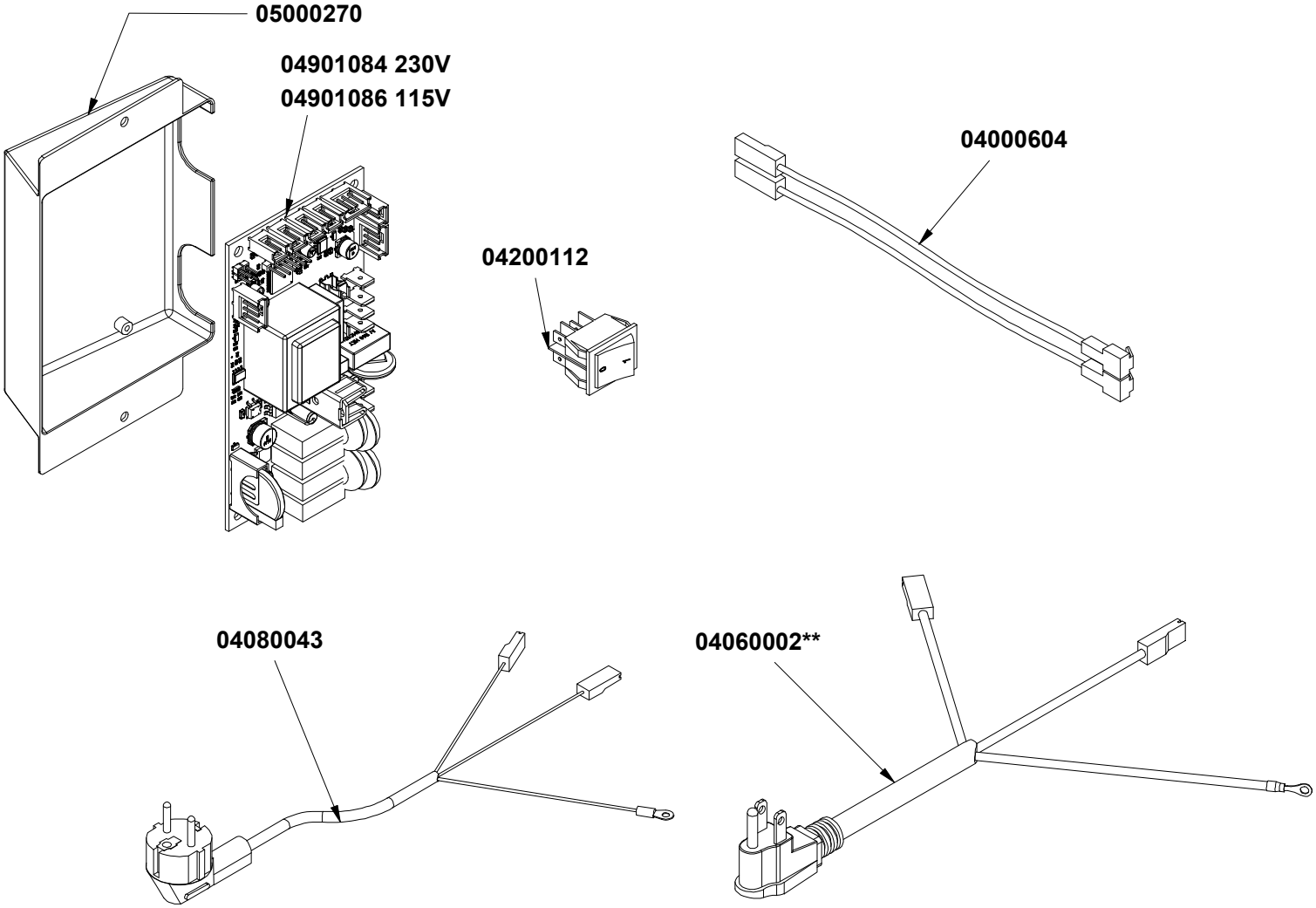


| CODE | DESCRIPTION | DESCRIZIONE |
|---|---|---|
| 04000694 | COMPLETE WIRING | CABLAGGIO COMPLETO |
| 04000696 | CABLE MAIN BOARD-BREW.BOARD | CABL.CENTR.PR.-SCHEDA ER. |
| 04000698 | CABLE BREW.BOARD-WIFI MODULE | CABL.SCHEDA ER.-MODULO WIFI |

**North America Market
Mercato Nord America

# COMP. ELETTRICI ED ELETTR.

# ELECTRIC AND ELECTRONIC PARTS

| COD. | DESCRIPTION | DESCRIZIONE | VAL. |
|---|---|---|---|
| 04000604 | EXTRA INLET SOLENOID MICROBAR 04 ACQUASTOP | SUPPLEMENTO EV. ENTRATA ACQUASTOP | |
| 04000694 | COMPLETE WIRING | CABLAGGIO COMPLETO OSCAR MOOD | |
| 04000696 | CONNECTION CABLE MAIN BOARD-DELIVERY BOARD | CAVO CONNESSIONE CENTR.-SCHEDA EROG. OSCAR MC | |
| 04000698 | CABLE CONNECT. POUR. BOARD - WIFI MOD. | CAVO CONNESSIONE SCHEDA EROG. - MODULO WIFI OS( | |
| 04060002 | PWR SPPLY CABLE UL AWG3x18 SJO 10A 90C 2mt USA D | CAVO ALIM. AWG3x18 SJO 60°C UL/CSA 2mt SPINA USADIF | |
| 04080043 | CABLE+PLUG CE SCHUKO H05VV-F 3x0,75 | CAVO ALIM. 2mt CE SPINA SCHUKO 90° H05VV-F 3x0,75 | |
| 04200112 | RED LIGHT 0/1 BIPOLAR SWITCH UL 16A | INTERRUTTORE BIPOLARE LUMINOSO ROSSO 0/1RETTAN | |
| 04901084 | MAIN BOARD | CENTR. ELETT. OSCAR MOOD 230V | |
| 04901086 | MAIN BOARD OSCAR MOOD 115V | CENTR. ELETT. OSCAR MOOD 115V | |
| 05000270 | SUPPORT CENTRAL CONTROL BOARD MUSICA | SUPP. CENTRALINA "MUSICA" | |

V.06 23/12/2025

www.nuovasimonelli.it

**Simonelli Group**
Via E. Betti, 1
62020 Belforte del Chienti
Macerata - Italy
T +39 07339501
info@simonelligroup.it
www.nuovasimonelli.it

**Nuova Distribution Usa**
6940 Salashan Pkwy, Bldg, A
Ferndale, WA 98248
T +1 3603662226
info@simonelliusa.com
www.simonelliusa.com

**Nuova Simonelli Asia Pacific**
61 Kaki Bukit Ave 1
#02-24 Shun Li Industrial Park
Singapore 417943
T +65 68410985
www.nuovasimonelliasiapacific.com

**Nuova Distribution France**
Hexapole - Actipole - Bat 5
Rue Maurice Herzog
73420 Viviers Du Lac
T +33 (0) 967894852
info@nuovadistribution.fr

nuova SIMONELLI®
The coffee machines you can trust.